SÜMA
BGU MASCHINEN

CORPORATE PRODUCT CATALOGUE 2018

Firewood machines | Profi and Timber grapples technologies | Metalworking

BGU-MASCHINEN | CORPORATE PRODUCT CATALOGUE 2018 | ENGLISH

SÜMA
BGU MASCHINEN

A continuing quality tradition.

With a 30-year experience in machinery production, the brand BGU stands for high-quality equipment „Made in Germany“ and demanding applications.

We design robust and very dependable machines, constructed for extremely hard and heavy-duty applications all for a fair price. We are an ISO-certified company with a very wide dealer network serving more than 18 European countries.
Our staff is strongly service- and customer-oriented. We work in tandem with our customers because their necessities and feedbacks are very important to us. And we try to process all market requirements and development as fast as possible in order to always supply up-to-date and efficient solutions.

In thirty years since the early roll-bench circular saws, we have expanded our portfolio to over 100 machines and tools of proven safety, dependability and functionality.
Our know-how and R&D operations allow us to keep up with this corporate quality mission also in future.
Our motto and whole marketing concept is very simple: „Actions speak louder than words“.
We need no grandstanding statements or superlative headings. A trial test and a practical demonstrations will do.
Do not hesitate. Ask our closest dealer in your area for a quality and performance demo. Alternatively, ask for them for more specifications and information on operation and lifetime. You will be amazed.

Contents

BGU Firewood machines

Log cutting saws	04 - 11
Cross-cutting beam saws	12 - 13
Table saws	14
Accessories for table saws	15
Garden shredders	16 - 19
Horizontal log splitters	20 - 21
Vertical log splitters	22 - 23

BGU-Profi

Vertical log splitters	24 - 27
Horizontal log splitters	28 - 29
Log splitter accessories	30 - 31
Automatic circular saw processors	32 - 33
Saw & splitter combination	34 - 35
Timber decks and racks	36 - 37
Automatic chainsaw processor	38 - 39
Accessories for sawmills	40
Bagging systems	41 - 43
Accessories for bagging systems	44 - 45

BGU-Timber grapples technologies

Timber grapples technologies	46 - 51
Grapple attachments	52 - 55

BGU-Metalworking

Metal band grinder	56 - 57
Press drills	58 - 59
Metal bandsaws	60 - 61

General information

General Sales Conditions	62 - 63

SÜMA
BGU MASCHINEN

BGU Log cutting saw with tilt-table

- WK 600/B Classic
- Spessart Woody 603 (230 V)
- Spessart Woody 603 (400 V)
- Spessart Woody 701

STANDARD WIDIA BLADE

High quality paint, powder coating, scratch-proof and weather resistant

Sturdy all-steel, bended plate construction.

It comes with wheel arrangement and handling grip included

BGU-MASCHINEN VIDEO CLIPS!
You may download demo video from the Internet:
www.bgu-maschinen.de/service

For more accessories please see page 15

Accessories:

Log retainer		
		available for all models Spessart Woody 603, Spessart Woody 701, WK 600/B Classic and WK 700 Z Classic
	Code No.	**91272**

Log cutting saws with tilt-table	
Technical Data	
Power / motor	
Rated power	
Over-volt safety	
Saw blade speed	
Cutting capacity (log Ø)	
Blade diameter Ø	
Weight	
Code No.	

The unit is equipped with a standard adjustable log stop.

The tilt-table is equipped with secure transport safety.

Basic models

Basic log cutting saws for residential use and dependable quality. Recommended for beginners!

- Compact construction
- As easy as pie, with the smooth-tilting log carriage
- It comes with own set of wheels and handling grip
- Log retainer available extra on request (Code No. 91272)
- Shipped fully assembled from our factory (no assembling costs)

01

- Powered by gasoline engine
- All-steel channel frame welded and bent to shape

02

- New, basic model at affordable price for residential use

03

- Motor safety with voltage switch

04

- Motor safety with voltage switch
- Saw blade diameter 700 mm (27.5 in)

01 WK 600/B Classic	02 Spessart Woody 603 (230 V)	03 Spessart Woody 603 (400 V)	04 Spessart Woody 701
Gasoline	Electric, 230 V	Electric, 400 V, 16 A EC plug	Electric, 400 V, 16 A EC plug
4,0 kW / 5 PS	3,1 kW P_1 S6 40% ED	4,2 kW P_1 S6 40% ED	5,5 kW P_1 S6 40% ED
–	No-volt release switch	No-volt release switch	No-volt release switch
1480 rpm	1480 rpm	1480 rpm	1480 rpm
approx. 200 mm (7.9 in)	approx. 200 mm (7.9 in)	approx. 200 mm (7.9 in)	approx. 250 mm (9.84 in)
600/30 mm (23.6/1.2 in)	600/30 mm (23.6/1.2 in)	600/30 mm (23.6/1.2 in)	700/30 mm (27.6/1.2 in)
approx. 95 kg (209.4 lb)	approx. 88 kg (194 lb)	approx. 91 kg (200.6 lb)	approx. 112 kg (247 lb)
90158	**90218**	**90214**	**90215**

SÜMA
BGU MASCHINEN

BGU Log cutting saws with tilt-table

- **WK 780/2**
- **WK 780 RB/2**

Accessories:

Log retainer		
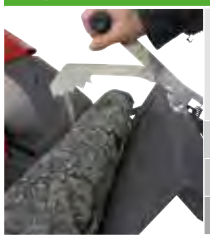		available for all models WK 780/2, WK 780 RB/2 and ZWK 710/2
	Code No.	**91273**

For more accessories please see page 15

Logs are loaded and fed to the blade on a tilt-carriage designed with a suitable slope to provide a firm log support and meanwhile muscle the log effortless to the blade.
The roller table with the timber trunk on it is muscled to the blade with a relatively small effort.

Runner-up models

Super work performance at an unbeatable value for money. Top solution for firewood preparation.

The log cutting saws in this series are the basic models of the notorious BGU-Maschinen generation of circular saws with tilt-table for cutting logs. Featuring all advantages of a rugged steel frame, this machine offers the additional benefit of a very long life and excellent endurance.
A very representative model is the WK 780 RB/2 powered by a gasoline engine, and therefore best recommended for outdoor applications where no other power source is available.

- Fully welded, rugged chassis
- User friendly, vibration less tilt-bench of steel plate
- Equipped with standard cut length stop
- Log retainer available extra on request (Code No. 91273)

01

- Drive via electric motor

02

- Self-propelled. No need for external power supply
- V-belt drive
- Powerful, 6.6 kW gasoline engine

Log cutting saws with tilt-table

Technical Data	01 WK 780/2	02 WK 780 RB/2
Power / motor	Electric, 400 V, 16 A EC plug	Gasoline-Engine
Rated power	7,5 kW P_1 S6 40% ED	6,6 kW / 9,0 PS
Over-volt safety	No-volt release switch	Tank capacity: 5.3 l (1.16 gal)
Saw blade speed	1480 rpm	1480 rpm
Cutting capacity (log Ø)	approx. 260 mm (10.2 in)	approx. 260 mm (10.2 in)
Blade diameter Ø	700/30 mm (27.5/1.2 in)	700/30 mm (27.5/1.2 in)
Weight	approx. 109 kg (240.3 lb)	approx. 135 kg (297.6 lb)
Code No.	**91233**	**91243**

SÜMA
BGU MASCHINEN

BGU Log cutting saws with tilt-table

- **WK 790 R/2**
- **ZWK 790/2**

For more accessories please see page 15

Log retainer		
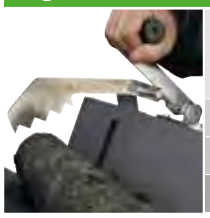		for models WK 790/2, ZWK 790/2
	Code No.	91274

Lateral stops for accurate cutting length

The Premium-Line models are designed for cutting through max 30 cm (11.8 in) logs in one stroke!

Telescopic timber-infeed rollers to handle timber in maximum length of up to 2.50 m (8.2 ft).

BGU-MASCHINEN VIDEO CLIPS!
You may download demo video from the Internet:
www.bgu-maschinen.de/service

Premium-Line!

The WK 790 R/2 and ZWK 790/2 are heavy-duty models for professional users requiring efficiency, endurance and powerful performance.

High quality is second to none when making a purchasing decision.
BGU Maschinen WK 790 R/2 and ZWK 790/2 are price-attractive, high-end-products that target market professionals and demanding customers for heavy-duty applications!
The circular saw blade has a diameter of 750 mm (29.5 in) allowing a through-cut of nearly 300 mm (11.8 in).

- 300 mm (11.8 in) cutting capacity (log Ø)
- Fast, easy blade change
- Power transmission to the blade shaft by means of 3 toothed belt drives
- Extreme stability and durability assured by sturdy own weight
- The log in-feed rollers and stops are standard
- Log infeed stops are standard
- Vibration-proof, ergonomic log tilt-carriage
- Log retainer available extra on request (Code No. 91274)

01

- Extra-powerful electric motor
- 750 mm (29.5 in) WIDIA saw blade

02

- 750 mm (29.5 in) WIDIA saw blade
- PTO shafts available on request for an extra price (Code No. 95060)

Log cutting saws with tilt-table

Technical Data	01 WK 790 R/2	02 ZWK 790/2
Power / motor	Electric, 400 V, 32 A EC plug	PTO shaft
Rated power	9,0 kW P_1 S6 40% ED	Tractor power 15 kW / 20 PS
Over-volt safety	No-volt release switch	–
Saw blade speed	1480 rpm	1480 rpm
Cutting capacity (log Ø)	approx. 300 mm (11.8 in)	approx. 300 mm (11.8 in)
Blade diameter Ø	750/30 mm (29.5/1.2 in)	750/30 mm (29.5/1.2 in)
Weight	approx. 225 kg (496 lb)	approx. 198 kg (436.5 lb)
Code No.	**91330**	**91331**

SÜMA
BGU MASCHINEN

BGU Log cutting saws with tilt-table

- **WK 700 Z Classic**
- **ZWK 710/2**

More accessories on page 15

BGU-MASCHINEN VIDEO CLIPS!
You may download demo video from the Internet:
www.bgu-maschinen.de/service

Accessories:

Log retainer		
		for Spessart Woody 603, Spessart Woody 701, WK 600/B Classic and WK 700 Z Classic
	Code No.	**91272**

Log retainer		
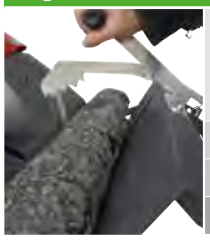		available for all models WK 780/2, WK 780 RB/2 and ZWK 710/2
	Code No.	**91273**

The unit is equipped with a standard adjustable log stop.

Our PTO-Model ZWK 710/2 is equipped with angular gearbox providing power drive to the saw arbour via V-belts.
Optimal reduction ratio!
The maximum number of blade revolutions is obtained at 500 RPM of the PTO shaft.

PTO circular saws

High-quality and a sturdy construction are the real plus of the models WK 700 Z Classic and ZWK 710/2.

They attach to the three-point linkage of any tractor for convenient use in the woods or in your yard as you may need from time to time.
The WK 700 Z Classic is the basic model in this product class. All ZWK models 710 have a very robust and firm construction, ensure optimal output, and cutting performance even for continuous operation.

- Compact construction
- Shipped fully assembled from our factory (no assembling costs)
- High quality paint, scratch-proof and weather resistant powder coating
- Equipped with standard cut length stop

01

- Fully-welded, angle-bar steel frame

02

- Welded, all-steel channel construction with vibration-free log carriage
- Heavy-duty angular gearbox

Log cutting saws with tilt-table

Technical Data	01 WK 700 Z Classic	02 ZWK 710/2
Power / motor	PTO shaft	PTO shaft
Rated power	Tractor power 12 kW / 16 PS	Tractor power 12 kW / 16 PS
Saw blade speed	1480 rpm	1480 rpm
Cutting capacity (log Ø)	approx. 250 mm (9.8 in)	approx. 260 mm (10.2 in)
Blade diameter Ø	700/30 mm (27.5/1.2 in)	700/30 mm (27.5/1.2 in)
Weight	approx. 114 kg (251.3 lb)	approx. 128 kg (282.2 lb)
Code No.	**90157**	**91257**

SÜMA
BGU MASCHINEN

BGU cross-cut saws

- KS 700 E
- KS 700 Z

STANDARD
WIDIA BLADE

The lateral flank is hinged to allow excellent serviceability for replacement of the saw blade.

Equipped with a standard graduated ruler (to control the log length) in price.

High quality paint, powder coating, scratch-proof and weather resistant

For more accessories please see page 15

Spare roller for roller table KS 700

	Retrofitting roller table (attached to the existing holes)
Code No.	**90194**

Accessories:

Roller table for KS 700

	Specialty: The infeed roller-table can be lifted up in a minute for transportation purpose.
Code No.	**90198**

Three-point linkage for KS 700 E

	Use it for short-distance transportation/ handling of your KS 700 E on the tractor.
Code No.	**90199**

No more tilting of the carriage to the blade. So, the log that is cut off the saw drops straight down into the hopper of the downstream belt conveyor.

The entire cross-cutting mechanism is a user-friendly construction, very easy to operate thanks to two oversized roller bearings. This makes the entire operation system exceptionally effortless.

Professional two-hands control Use: One hand holds the log retainer down, whilst the other operates the saw.

An hydraulic control valve is provided within operator's quick reach in order to switch the cutting blade on and off as needed.

Model 700 Z with shaft-mounted gear pump (built-in hydraulics).

Unique on the market

And there's much more to find out! This BGU cross-cutting saw merges top operation comfort and user-friendly handling.

- Low-energy motors on all electric models (less power consumption at higher output power)
- All electric models have an electric engine with safety thermal overload switch.
- Equipped with standard Widia saw blade, and log retainer.
- All 700 models are equipped with standard graduated ruler (to control the log length), and outlet conveyor included in price.
- An infeed roller table can be attached to the machine on request (Code No. 90198)
- KS 700 Z: This machine attaches directly to your tractor hydraulics. The saw blade is powered by the tractor hydraulics via PTO shaft and shaft-mounted gear pump (built-in hydraulics). The normal cutting performance is already available when the PTO shaft rotates at 300 rpm.

01

- An infeed roller table is available on request (accessory)

02

- Own built-in hydraulics with shaft-mounted gear pump
- Three-point linkage

Firewood cross-cutting saws

Technical Data	01 KS 700 E	02 KS 700 Z
Power / motor	Electric, 400 V, 16 A EC plug	PTO shaft
Rated power	5,2 kW P_1 S6 40% ED	Tractor power 15 kW / 20 PS
Pump capacity	–	approx. 20 l/min (4.4 gal/min)
Saw blade speed	1380 rpm	1500 rpm
Cutting capacity	approx. 250 mm (9.8 in)	approx. 250 mm (9.8 in)
Blade diameter Ø	700/30 mm (27.5/1.2 in)	700/30 mm (27.5/1.2 in)
Dimensions (W x L x H)	1130 x 1000 x 1400 mm	1170 x 1080 x 1400 mm
Weight	approx. 193 kg (425.5 lb)	approx. 250 kg (551.1 lb)
Code No.	**90190**	**90189**

SÜMA
BGU MASCHINEN

BGU roll-bench circular saw

- **RK 775/2**

Firewood circular saws merging quality and cost-effectiveness.

- A robust angle-bar stand ensures safe and firm standing during cutting operations
- A bottom shroud around the blade directs dust and chips into dust collection port

STANDARD
WIDIA BLADE

High quality powder coating, scratch-proof and weather resistant

Precision steel table entirely on roller bearings

It comes with wheel arrangement and handling grip included

BGU-MASCHINEN VIDEO CLIPS!
You may download demo video from the Internet:
www.bgu-maschinen.de/service

Roll-bench circular saw

Technical Data	RK 775/2
Power / motor	Electric, 400 V, 16 A EC plug
Rated power	5,5 kW P_1 S6 40% ED
Overload safety	No-volt release switch
Saw blade speed	1480 rpm
Table size	1300 x 880 mm (51.2 x 34.6 in)
Table height	850 mm (33.5 in)
Height of cut	approx. 225 mm (8.8 in)
Blade diameter Ø	700/30 mm
Weight	approx. 134 kg (295.4 lb)
Code No.	**91224**

Accessories for circular saws

Log retainer

	for Spessart Woody 603, Spessart Woody 701, WK 600/B Classic and WK 700 Z Classic
Code No.	**91272**

	available for all models WK 780/2, WK 780 RB/2 and ZWK 710/2
Code No.	**91273**

	for models WK 790/2 and ZWK 790/2
Code No.	**91274**

PTO shaft

	Cat. 1, 1 3/8˝ w. 6 splines 1 m (3.2 ft) long suitable for all PTO saws and splitters, logging winches up to model FSW 4.5, as well as GSZ 242 Combi.
Code No.	**95060**

Chrome-steel

	debarking blades, Ø 600 mm (23.6 in), 30 mm (1.2 in) bore
Code No.	**95271**

Precision Widia-blade with 30 mm (11.8 in) bore

	Saw blades Ø 700 mm (27.5 in) with 84 teeth suitable for BGU circular saws are also available.
Code No.	**95024**

Replacement Chrome-blade with 30 mm bore

	Ø 600 mm (23.6 in), 36 teeth
Code No.	**95004**
	Ø 700 mm (27.5 in), 42 teeth
Code No.	**95021**
	Ø 750 mm (29.5 in), 46 teeth
Code No.	**90076**

Spare Widia blades with 30 mm bore

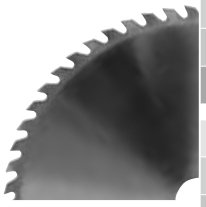

	Ø 600 mm (23.6 in), 56 teeth
Code No.	**95002**
	Ø 700 mm (27.5 in), 56 teeth
Code No.	**95011**

SÜMA
BGU MASCHINEN

BGU garden shredder

- GSE 20 Woody
- GSB 20 Woody

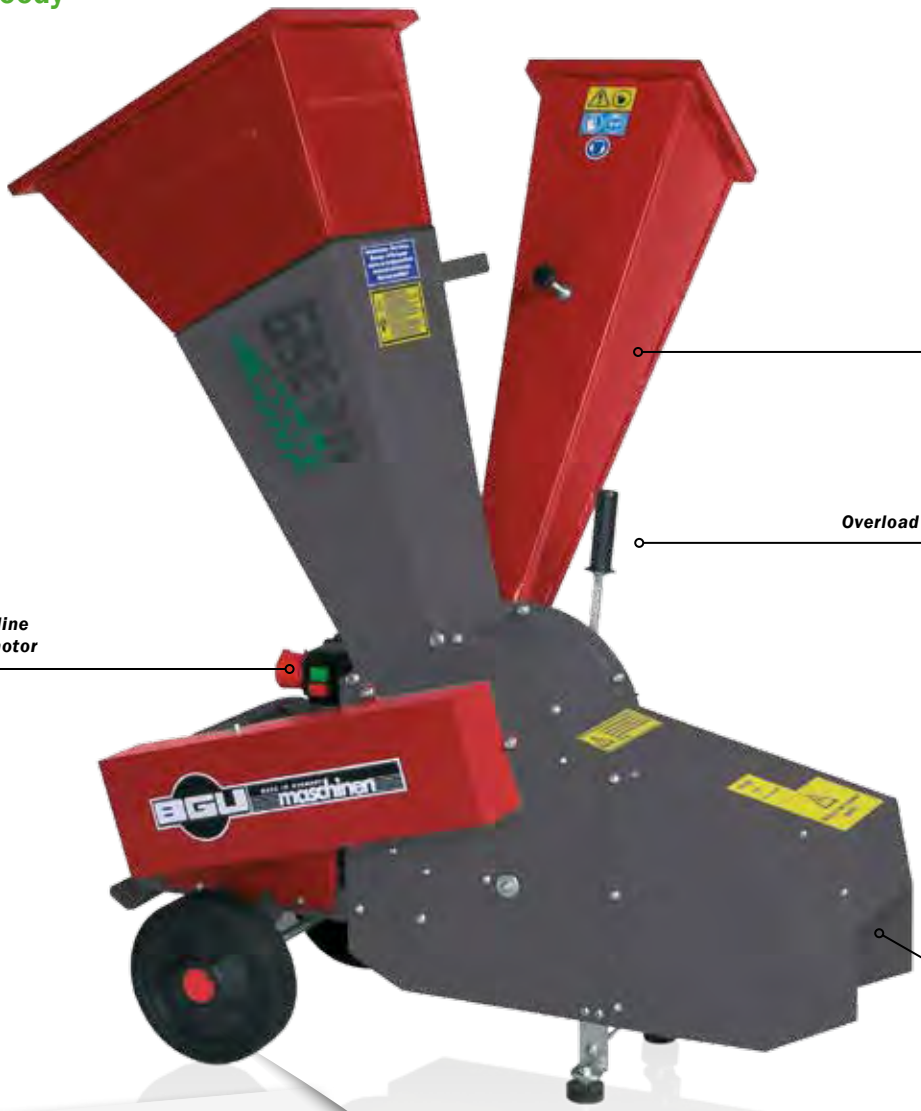

High-quality powder painting, scratch-proof and resistant to weathering agents

Overload safety

Available with gasoline engine or electric motor

The discharge chute directs the shredded material to the ground

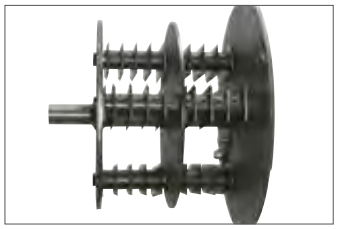

The core of this machine is an engineered rugged hammer mill drum with 30 stagged flails very easy to access and replace for maintenance.

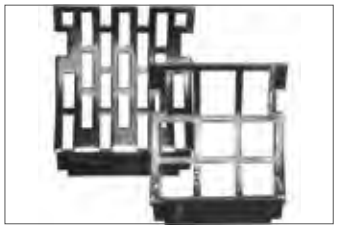

Controllable particle size, fine or coarse compost particles size can be obtained by insetting the corresponding perforated grates under the hammer mill. This allows optimum composting performance.

The hammer mill principle

You will be amazed, how much this machine can bring you!

Two machines in one at a unique price combination.
Two machines in one: a combination machine equipped with shredding hammers and disc blade chipping device.
Top performance is a must requirement for most applications.
The amazing performance of this unit goes behind all expectations that one would have in this price range.
A very competitive, low-price and still high-quality unit resulting from a large scale industrial production.

- Shreds branches and waste up to Ø 65 mm (2.5 in)
- Equipped with two built-in chipping blades
- Equipped with swinging cutting hammers out of special hardened steel
- Durable rotor with built-in lateral disc blade
- High quality paint, scratch-proof and weather resistant powder coating

01

- 3.8 kW electric motor

02

- 3,7 kW / 5,0 PS gasoline engine

A special crank lever is provided on one side of the machine to open the slotted grated and quickly remove eventual residual material clogging the machine.

Garden shredder

Technical Data	01 GSE 20 Woody	02 GSB 20 Woody
Power / motor	Electric, 400 V, 16 A EC plug	Gasoline engine
Rated power	3,8 kW P_1	3,7 kW / 5,0 PS
Motor speed	2850 rpm	3600 rpm
Drum speed	2400 rpm	3100 rpm
Drum width	200 mm	200 mm
Drum-Ø	300 mm	300 mm
Branch-Ø	max. 65 mm	max. 65 mm
Hammers	30 pieces	30 pieces
Dimensions (W x L x H)	1150 x 1050 x 1500 mm	1150 x 1050 x 1500 mm
Weight	approx. 122 kg (269 lb)	approx. 102 kg (225 lb)
Code No.	**94500**	**94502**

SÜMA
BGU MASCHINEN

BGU garden shredder

- GSZ 242 Combi
- GSE 242 Combi
- GSB 242 Combi

BGU-MASCHINEN VIDEO CLIPS!
You may download demo video from the Internet:
www.bgu-maschinen.de/service

Accessories:

Spacer		
		0,60 m (1.9 ft) long for higher discharge suitable for all models 242
	Code No.	94560

PTO shaft extension		
	Code No.	95061

The number of sharp double-edged steel paddles on the drum surface determines the size of the final compost. The compost size is reduced by pulling the paddles (steel rods) out. The hammers and the cutting knives can be easily replaced through the special access opening provided for maintenance of the machine.

The swinging hammers mounted across the drum can be reversed and used twice. Hammers and chipping knife are all made of high-quality special steel. All bolts are made of annealed steel with surface hardening in order to avoid cracking and shrinking.

A flawless mechanism

The EFFICIENT, practical way to solve clean-up problems of HOME OWNERS up to large MUNICIPAL LANDSCAPERS!

When you need quality and efficacy, THERE WE ARE. Well designed chippers and shredders are coming into more frequent use for serious gardeners, country estates, landscapers, smallholders and local authorities. The perfect answer to yard clean-up: BGU shredders are have an upper, rotating, discharge chute with adjustable ejector flap to direct compost material straight into a collection bin or even shred and pile in the desired set up location saving laborious shovelling, piling, and disposal. A great way to eliminate waste disposal and recycle all your organic garden debris!

- Shreds branches and waste up to Ø 100 mm (3.9 in)
- Durable rotor with built-in lateral disc blade
- Equipped with swinging cutting hammers out of special hardened steel
- User-friendly operation system
- High quality paint, scratch-proof and weather resistant powder coating

01

- PTO powered
- PTO shaft available as accessory (Code No. 95060)

02

- Drive via electric motor

03

- Powered by gasoline engine

Garden shredder

Technical Data	01 GSZ 242 Combi	02 GSE 242 Combi	03 GSB 242 Combi
Power / motor	PTO shaft	Elektro, 400 V, 32 A CE-Stecker	Gasoline engine
Rated power	Tractor power: 12 kW / 16 PS	9,0 kW P_1	9,6 kW / 13,0 PS
Motor speed	3600 rpm	2850 rpm	3600 rpm
Drum speed	2400 rpm	2400 rpm	2400 rpm
Drum width	240 mm	240 mm	240 mm
Drum-Ø	440 mm	440 mm	440 mm
Branch-Ø	max. 100 mm	max. 100 mm	max. 100 mm
Hammers	34 pieces	34 pieces	34 pieces
Dimensions (W x L x H)	1600 x 1700 x 1610 mm	1650 x 1700 x 1610 mm	1900 x 1700 x 1610 mm
Weight	approx. 238 kg (524 lb)	approx. 288 kg (635 lb)	approx. 265 kg (584 lb)
Code No.	**94556**	**94554**	**94562**

SÜMA
BGU MASCHINEN

BGU Horizontal Wood Splitters

- SM 300 (230 V)
- SM 300 (400 V)

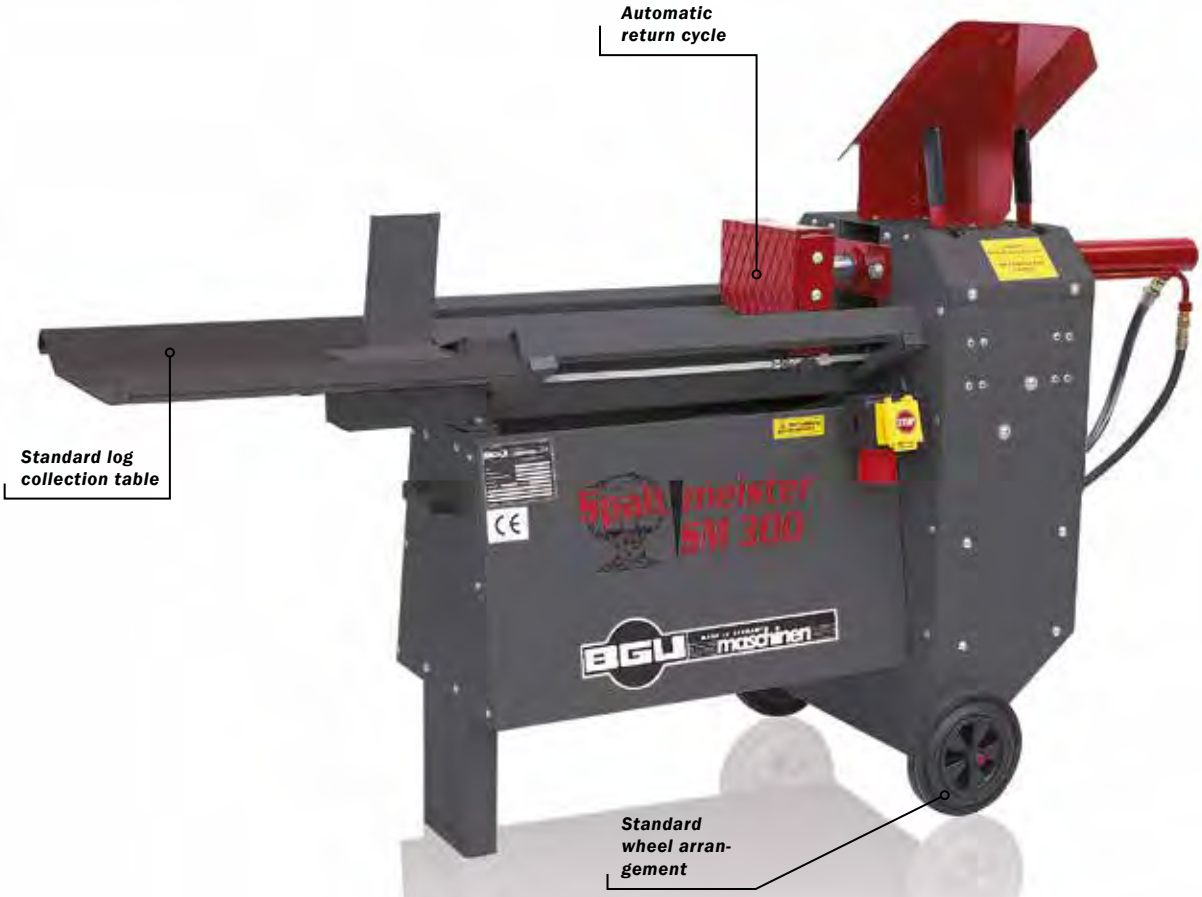

BGU-MASCHINEN VIDEO CLIPS!
You may download demo video from the Internet:
www.bgu-maschinen.de/service

Accessories:

„Perfekt Plus“ wheel set	
The „Perfekt plus“ wheel set comprises: a front steering wheel with brakes and pneumatic tires, two large pneumatic tyres with mounting plates, 4-way wedge with steering lever.	
Code No.	**90284**

Will do short and long logs!

- Two-stage hydraulic pump for increased ram forward speed (fast splitting cycle)
- Automatic return cycle
- Motor safety switch and phase changer included in price (for 400V models)
- Compact structure saves storage space
- Capable of handling even hard wood chunks by repeated splitting cycles
- User-friendly, two-hands safety control

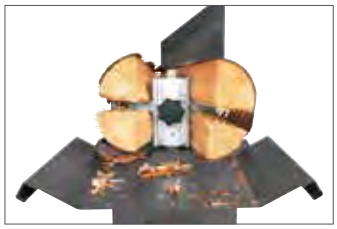

Split four in one go:
A special slip-on 4-ways wedge is available extra as an accessory.

A manual adjustment screw allows safe stroke adjustment, and splitting of short logs at any intermediate position.

Splitting straight into the wheelbarrow speeds up your site time!

- Drive via 230 V electric motor
- Drive via 400 V electric motor

Horizontal splitter

Technical Data	SM 300 (230 V)	SM 300 (400 V)
Power / motor	Electric, 230 V	Elektro, 400 V
Rated power	2,2 kW P_1	3,0 kW P_1
Splitting power	6 t	6 t
Splitting stroke length	–	–
Log length	max. 570 mm	max. 570 mm
Speed	–	–
Return speed	–	–
Dimensions (W x L x H)	1520 x 600 x 1200 mm	1500 x 600 x 1200 mm
Transport dimensions (W x L x H)	1200 x 600 x 1200 mm	1200 x 600 x 1200 mm
Weight	approx. 138 kg (304.2 lb)	approx. 138 kg (304.2 lb)
Code No.	**90291**	**90290**

SÜMA BGU MASCHINEN

BGU Vertical Log Splitters

- HS 71 (230 V)
- HS 71 (400 V)
- HS 61/2 Tornado
- HS 80/2 E
- HS 80/2 B

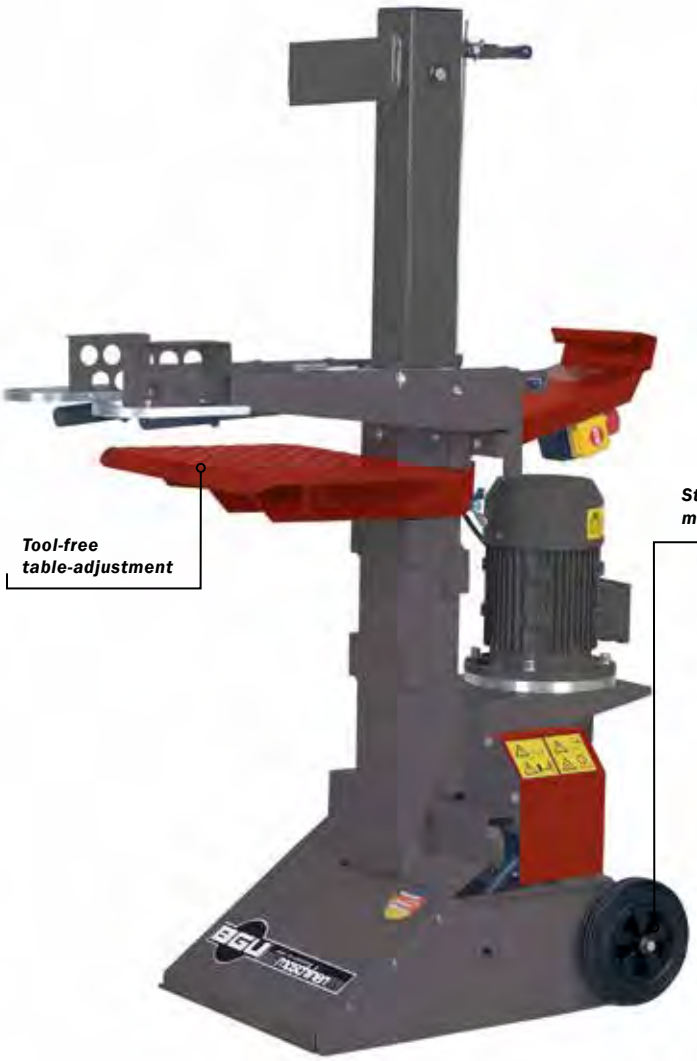

BGU-MASCHINEN VIDEO CLIPS!
You may download demo video from the Internet:
www.bgu-maschinen.de/service

PREMIUM-LINE!
High-End BGU Products

Accessories for log splitters

Splitting wedge

	for all BGU vertical splitters
Code No.	**90302**

Cleaving wedge

	for all BGU vertical splitters
Code No.	**90303**

Wedge extension

	for BGU log splitter HS 90
Code No.	**90336**

Vertical splitter

Technical Data	01 HS 71 (230 V)
Power / motor	Electric, 230 V
Rated power	2,2 kW P_1
Splitting power	6 t
Splitting stroke length	520 mm
Log length	550 / 750 / 1080 mm
Speed	–
Return speed	–
Height w. retracted cylinder (down)	1100 mm
Height with uplifted cylinder	1600 mm
Dimensions (W x L)	500 x 750 mm
Weight	approx. 126 kg (277 lb)
Code No.	**90278**

Will do short and long logs!

Heavy-duty, long-lasting and maintenance-free like no other in this range of „first class“ equipment!

BGU log splitters are designed to handle both long and short logs. Excellent price/quality ratio.
Heavy-duty steel construction out of sturdy square tubes to assure top stability and safe standing during splitting.

- Rugged, easy-to-use and maintenance-less
- Effortless, user-friendly operation
- Two-hands control
- Inbuilt two-speed system (fast return stroke)
- High quality paint, scratch-proof and weather resistant powder coating
- Tool-free table-adjustment
- Motor safety switch and phase changer included in price (for 400 V models)

01 02

- All motors are standard with safety switch

03

- Enormous time saving: An extra large hydraulic pump and a powerful 4 kW electric motor bring extra quick cutting cycles and real time savings.

04

05

- Two-speed technology with a tandem pump allowing
- Automatic shifting from high speed to low force and vice versa

02 HS 71 (400 V)	03 HS 61/2 Tornado	04 HS 80/2 E	05 HS 80/2 B
Electric, 400 V, 16 A EC plug	Electric, 400 V, 16 A EC plug	Electric, 400 V, 16 A EC plug	Gasoline engine
3,0 kW P_1	4,0 kW P_1	4,0 kW P_1	3,7 kW / 5,0 PS
7 t	6 t	8 t	8 t
520 mm	500 mm	500 mm	500 mm
550 / 750 / 1080 mm	550 / 750 / 1080 mm	550 / 750 / 1080 mm	550 / 750 / 1000 mm
–	5,5 s / 550 mm	7,0 s / 550 mm	5,5 s / 550 mm
–	2,0 s / 550 mm	3,5 s / 550 mm	3,0 s / 550 mm
1100 mm	1100 mm	1100 mm	1100 mm
1600 mm	1600 mm	1600 mm	1600 mm
500 x 750 mm	600 x 1000 mm	600 x 1000 mm	600 x 1000 mm
approx. 126 kg (277 lb)	approx. 148 kg (326 lb)	approx. 148 kg (326 lb)	approx. 225 kg (496 lb)
90279	**90323**	**91334**	**91333**

SÜMA
BGU MASCHINEN

BGU Vertical Log Splitters

- **USP 13 HZ/6**
- **USP 13 HZE/6**

NEW

All USP models are now on also available with **winch ASW 750!**

The winch ASW 750 is designed to pull tough-to-lift chunks on the splitter. Eventually retro-fitting on previous purchases.

The ram stroke can be adjusted to any longer/ shorter one by means of the two black knobs located on the ram control rod.

A lateral log fender on each splitter side, ensures maximum operator's safety.

13 t Vertical Log Splitter with combined power source

- Two-stage control valve for increased ram forward speed (fast splitting cycle)
- Stainless brass pads allow smooth sliding of the wedge and longer frame life.
- Mechanical two-hands control
- Fully retractable ram for road transportation and storage purposes
- Solid steel frame with inbuilt hydraulic oil tank
- Advanced technology with cast iron pumps - reduced noise for PTO variants

The lower linkage pins are adjustable in 8 positions by simply sliding them out or tipping them up/down as shown in the picture.
This system provides for universal hitching to any kind of tractor.

The ram stroke of all PTO models USP 13/16/22 is hydraulically controlled by an over-dimensioned cast-iron pump.

For more accessories please see page **30**

01

- PTO powered

02

- Combination drive with electric motor and PTO shaft

Vertical Log Splitters

Technical Data	01 USP 13 HZ/6	02 USP 13 HZE/6
Power / motor	PTO shaft	PTO and Electric Motor 400 V 16A w. EC plug
Rated power	Tractor power: 20 kW / 27 PS	Tractor power: 20 kW / 27 PS E-Motor: 5,5 kW P_1
Splitting power	13 t	13 t
Log length	max. 1100 mm	max. 1100 mm
Extended piston rod (all UP)	1050 mm	1050 mm
Cylinder forward speed w. PTO drive	9/7/1050 s/mm	9/7/1050 s/mm
Cylinder return speed with PTO drive	5/1050 s/mm	5/1050 s/mm
Cylinder forward speed w. electric drive	–	15/8/1050 s/mm
Cylinder return speed w. electric drive	–	6/1050 s/mm
Height w. retracted cylinder (down)	2000 mm	2000 mm
Height with uplifted cylinder	2800 mm	2800 mm
Dimensions (W x L x H)	800 x 1200 x 2000 mm	800 x 1200 x 2000 mm
Weight	approx. 364 kg (802 lb)	approx. 405 kg (893 lb)
Code No.	**94753/6**	**94754/6**

SÜMA
BGU MASCHINEN

BGU Vertical Log Splitters

- USP 16 HZ/2
- USP 16 HZE/2
- USP 22 HZ/2

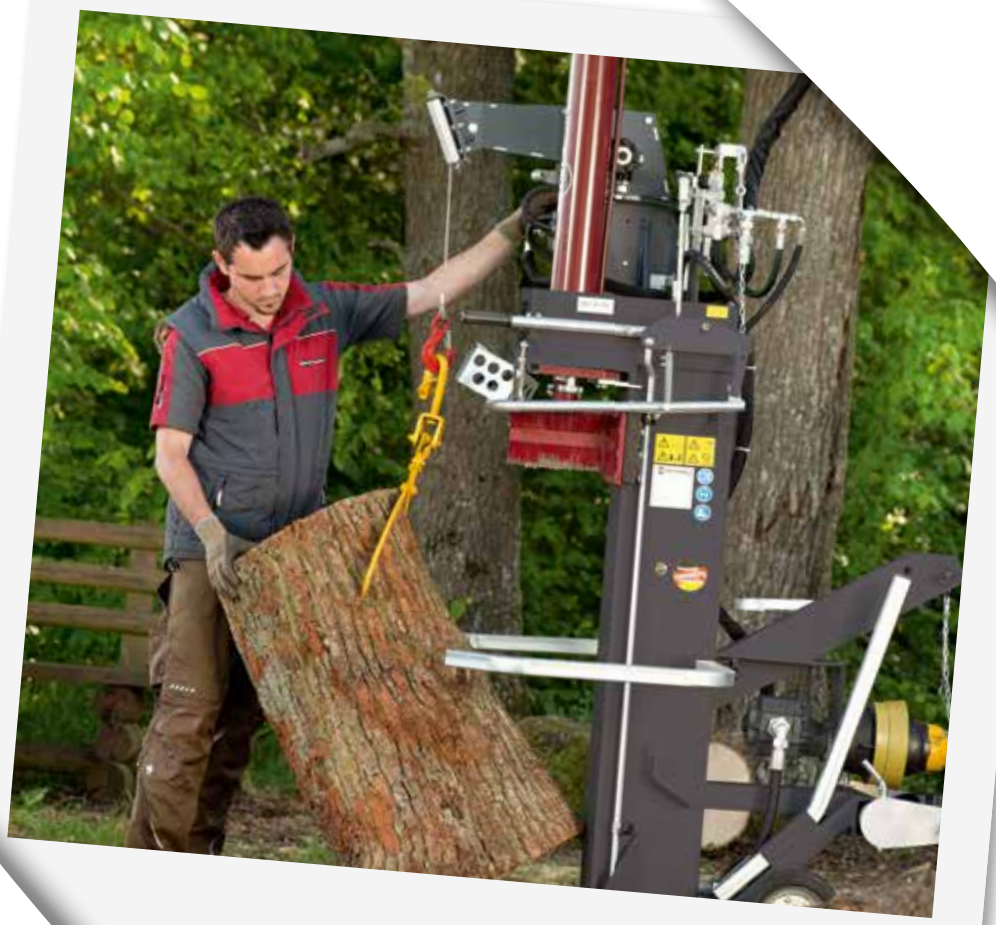

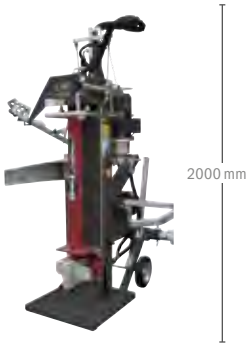

USP 13 / USP 16 / USP 22
in transport asset with the cylinder retracted all the way down.

NEW All USP-Models are now on also available with **winch model ASW 750!**

Winch designed to pull tough-to-lift chunks on the splitter. Splitting firewood was never so fun before! Here pictured with log lifter model ASW 750 (accessory also for retro-fitting). The model ASW 750 is available (extra) as a mechanical variant (Code No. 96350) or a remotely radio-controlled variant (Code No. 96351).

The Premium models

- Two-stage control valve for increased ram forward speed (fast splitting cycle)
- Stainless brass pads allow smooth sliding of the wedge
- Mechanical two-hands control
- Fully retractable ram for road transportation and storage purposes
- Solid steel frame with inbuilt hydraulic oil tank
- Advanced technology with cast iron pumps – Reduced noise for PTO variants
- Standard Universal hitching to any kind of tractor Cat. I or II
- Log fenders in price

An upper handle is located on the left-hand side of the frame and used to secure the log central under the wedge. At the same time, another handle on the right-hand side is pushed down to control the cylinder valve. The upper handle on the left side has a holding and a control function.

Floor standing table for short logs (70 cm = 2.3 ft).

For more accessories please see page **30**

01

- PTO powered

02

- Combination drive with electric motor and PTO shaft

03

- PTO powered

Vertical Log Splitters

Technical Data	01 USP 16 HZ/2	02 USP 16 HZE/2	03 USP 22 HZ/2
Power / motor	PTO shaft	PTO and 400 V 16 A electric motor with EC Plug	PTO shaft
Rated power	Tractor power: 20 kW / 27 PS	Tractor power: 20 kW / 27 E-Motor: 5,5 kW P_1	Tractor power: 20 kW / 27 PS
Splitting power	16 t	16 t	22 t
Log length	max. 1100 mm	max. 1100 mm	max. 1100 mm
Extended piston rod (all UP)	1050 mm	1050 mm	1050 mm
Speed forwards 1	12/1050 s/mm	12/1050 s/mm	13/1050 s/mm
Speed forwards 2	6/1050 s/mm	6/1050 s/mm	6/1050 s/mm
Return speed	7/1050 s/mm	7/1050 s/mm	8/1050 s/mm
Height w. retracted cylinder (down)	1980 mm	1980 mm	2008 mm
Height with uplifted cylinder	2800 mm	2800 mm	2800 mm
Dimensions (W x L x H)	1300 x 1300 x 2700 mm	1300 x 1300 x 2700 mm	1300 x 1300 x 2700 mm
Weight	approx. 443 kg (976 lb)	approx. 480 kg (1058 lb)	approx. 445 kg (981 lb)
Code No.	**94731/2**	**93631**	**94743/2**

SÜMA
BGU MASCHINEN

BGU Horizontal Wood Splitters

- SP 30 HZH/S
- SP 30 HZEH/S
- SP 30 HEH/S

BGU-MASCHINEN VIDEO CLIPS
You may download demo video from the Internet:
www.bgu-maschinen.de/service

For more accessories please see page **30**

The fast forward speed of the hydraulic ram is made possible by the oversized hydraulic pump group III. A tandem pump is flanged to the main pump to power all ancillary functions as wedge lift and log lift operations.

Ergonomic and safe operation. All machine functions are controlled from a very accessible operator's stand with overall view on the machine.

This heavy-duty splitter is capable to handle effortlessly even very hard and crooked timber full of knots.

Extreme splitting in the woods!

User friendly and efficient for rapid and trouble-free operation. Recommended for severest applications at wood owners as well as medium-size logging contractors.

- Two-speed operation valve for shorter splitting cycles by means of 2-stage control valve
- 2 Hydraulic pumps and one dedicated hydraulic system for splitter </5196>ram operation
- No reduction of ram (splitting) speed in case of concurrent operation of different controls
- Hydraulic timber lift
- Stepless adjustable stroke length
- Hydraulic wedge lift included in price
- Large extension table at splitter outlet for clean sticks collection, whilst the next log can be loaded on the splitter carriage ready for the next cycle.
- Extra-large hydraulic oil tank (approx. 60 l = 13.2 gal)
- On request (extra-price), the splitter can be supplied with an optional star-wedge (6-ways)
- Operation hours counter available on request (not in price)
- Hydraulic timber lifter (folding up and down)

Horizontal Wood Splitters

Technical Data	01 SP 30 HZH/S	02 SP 30 HZEH/S	03 SP 30 HEH/S
	• PTO powered	• Powered by PTO or electric motor	• Powered by electric motor with 7,5 kW P_2 / 9,5 kW P_1
Power / motor	PTO shaft	PTO and 400V electric motor 32 A EC plug, Delta-Star switch	400 V Electric motor + 32 A EC plug, Delta-Star switch
Rated power	Tractor power: 35 kW / 48 PS	Tractor power: 35 kW / 48 PS E-Motor: 7,5 kW P_2 / 9,5 kW P_1	7,5 kW P_2 / 9,5 kW P_1
Splitting power	30 t	30 t	30 t
Log length	max. 1250 mm	max. 1250 mm	max. 1250 mm
Speed	max. 9 cm/s	max. 9 cm/s	max. 9 cm/s
Fast cylinder forward	max. 21 cm/s	max. 21 cm/s	max. 21 cm/s
Cylinder return speed with PTO drive	max. 14 cm/s	max. 14 cm/s	–
Transport dimensions (W x L x H)	2990 x 1850 x 1660 mm	2990 x 1850 x 1660 mm	2990 x 1850 x 1660 mm
Dimensions (W x L x H)	4050 x 2050 x 1590 mm	4050 x 2050 x 1590 mm	4050 x 2050 x 1590 mm
Weight	approx. 1038 kg (2288 lb)	approx. 1110 kg (2447 lb)	approx. 1064 kg (2345 lb)
Code No.	**94770**	**94772**	**94774**

SÜMA - BGU-Maschinen - a German brand product

SÜMA BGU MASCHINEN

Accessories for USP models

Hydraulic timber lift

for pulling tough-to-lift chunks, with separate UP/DOWN control valves, oil is supplied from the machine via oil pressure lines

for USP 13, USP 16 and USP 22

Code No. **94721**

for USP 16 and USP 22 in combination with ASW 750

Code No. **94727**

Mechanical timber lift

for USP 13, USP 16 and USP 22

Code No. **94728**

Slip-on 4-way wedge

for all USP types 13, 16 and USP 22.

Code No. **94716**

Hydraulic winch ASW 750 M

for USP 13, 16 and 22

with idle

Pull force: 750 kg (1653.5 lb) 30 m (98.4 ft) rope in Ø 6 mm (0.2 in), including pulley

accessory also for retro-fitting pressure transmission via oil pressure lines

Hand-lever-operated

Code No. **96350**

Hydraulic winch ASW 750 F

for USP 13, 16 and 22

with idle

Pull force: 750 kg (1653.5 lb) with 30 m (98.4 ft) rope in Ø 6 mm (0.2 in), including pulley

for retro-fitting via oil pressure lines

Remote operation through a 3-channel radio control, including receiver and sender

Code No. **96351**

Floor standing table

For all USP types 13, 16 and 22

For splitting short logs up to 70 cm (2.3 ft) length. User-friendly hook-up system

Code No. **94717**

Tow bar with steering wheel

For all USP types 13, 16 and 22

For convenient transportation of BGU log splitters on a smooth and firm ground

Code No. **94757**

PTO shaft

Cat. 1, 1 3/8“

6 splines, 1 m (3.3 ft) long

suitable for all Saw & Splitter processors as well as all logging winches up to FSW 4.5 and GSZ 242 Combi

Code No. **95060**

TOP EFFICIENCY!
These accessories are designed for throughout easier and safer working conditions both on a yard and in the woods!

Accessories for horizontal log splitters, models SP

Hydraulic timber lifter ASW 750 M for SP 30

	with idle
	Pull force: 750 kg (1653.5 lb) 30 m (98.4 ft) rope in Ø 6 mm (0.2 in), including pulley
	fixation brackets for retro-fitting on previously purchased SP 30
	Mechanical operation with hand crank and rope pull
Code No.	**96355**

Hydraulic timber lifter ASW 750 F for SP 30

	with idle
	Pull force: 750 kg (1653.5 lb) 30 m (98.4 ft) rope in Ø 6 mm (0.2 in), including pulley
	fixation brackets for retro-fitting on previously purchased SP 30
	Remote operation through a 3-channel radio control, including receiver and sender
Code No.	**96356**

Splitting wedge

	4-way splitter wedge
Code No.	**94746**

	6-way wedge (star-shaped)
Code No.	**94747**

SÜMA - BGU-Maschinen - a German brand product

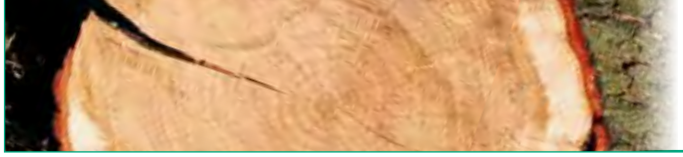

SÜMA
BGU MASCHINEN

BGU Saw Processors

- **PC 704 Z/4**
- **PC 704 EZ/4**

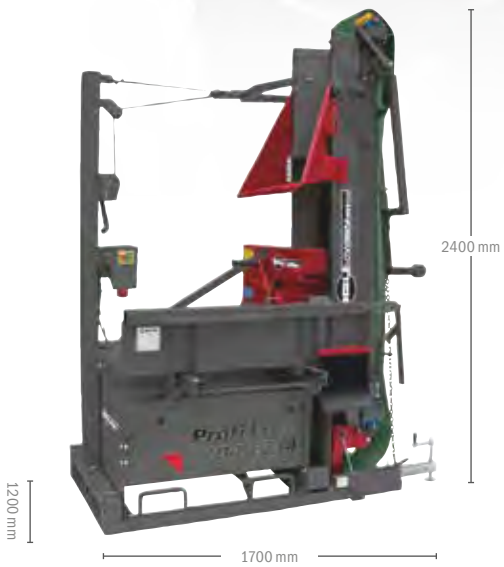

Profi-Cut PC 704 EZ/4 transport asset

Heavy-duty circular saw for firewood

The machine is especially conceived for those who deal in large firewood productions. The machine is capable to handle and process wood in full cord length up to approximately 1 m.

The standard machine works on a 3-point hitch and a cardan shaft for power take off from the tractor. Available also as a combination version (PC 704 EZ/4) equipped with both PTO and E-motor drive and recommended for stationary use.
Logs that are cut automatically drop onto a discharge hopper and from there on a conveyor belt that leads them to a nearby container or truck. No more messy and nasty picking of the logs and site clearing!

- 3-4 cords per hour
- One-man operation only
- Adjustable log length from 250-500 mm (9.8-19.7 in)
- High quality paint, scratch-proof and weather resistant powder coating
- Cradle-shaped log carriage on sliding rails and ball bearings for effortless advancing of the log to the blade
- Drive shaft available on request for an extra price! (Code No. 95060)
- Now available with a new optimized hopper

This machine is EC-approved and fully complies with the EC safety Rules and Regulations. The saw model PC 704 EZ/4 has an inbuilt electric motor that can be started when PTO power is disconnected.

The cradle-shaped timber carriage on the saw is sliding on rails mounted on ball bearings for smooth, effortless operation.

The Profi Cut model 704 EZ/4 is a combination machine with a powerful electric motor connected to the angular driving gear by means of two extra large V-belts. For easier maintenance and procurement, all consumable parts are commercial ones.

Both models PC 704Z / 4 and PC 704EZ / 4 are standard equipped with integrated, telescopic log conveyor. The 2-strokes belt is operated by a crank-lever system ensuring maximum operator's comfort.

The log length is adjustable from 250 to 500 mm (0.80-19.6 in) by means of a special sliding stop (square tube) that can be moved to any position and fastened by means of a practical spring pin.

BGU-MASCHINEN VIDEO CLIPS
You may download demo video from the Internet:
www.bgu-maschinen.de/service

Saw processors

Technical Data	PC 704 Z/4	PC 704 EZ/4
Power / motor	PTO shaft	Combination power with PTO shaft and 400 V, 16 A electric motor and EC-plug
Rated power	Tractor power:approx. 20 kW/27 PS	Tractor power: 20 kW/27 PS E-Motor: 7,5 kW P_1 S6 40% ED
PTO shaft speed	max. 540 rpm	max. 540 rpm
Output	3–4 cord/h	3–4 cord/h
Timber diameter	max. 270 mm	max. 270 mm
Timber diameter	min. 80 mm	min. 80 mm
Saw blade diameter	700/30 mm	700/30 mm
Log length	adjustable: 200–500 mm	adjustable: 200–500 mm
Length of the conveyor	4300 mm	4300 mm
Elevation of the log conveyor	max. 3000 mm	max. 3000 mm
Width of the conveyor belt	250 mm	250 mm
Transport dimensions (W x L x H)	1700 x 1200 x 2400 mm	1700 x 1200 x 2400 mm
Weight	approx. 560 kg (1234 lb)	approx. 598 kg (1318 lb)
Code No.	**90045**	**90049**

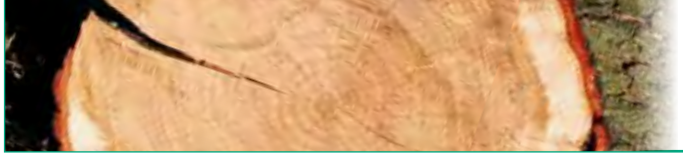

SÜMA
BGU MASCHINEN

BGU Saw & Splitter Combination

- SSM 271 Z
- SSM 270 EZ

STANDARD WIDIA BLADE

Equipped with standard timber retainer conveniently installed near the operator's control station for user-friendly operation.

SSM 270 EZ: A standard set of built-in, extendible guide rollers prevents tipping over when working with long timber up to 3 m (9.8 ft).

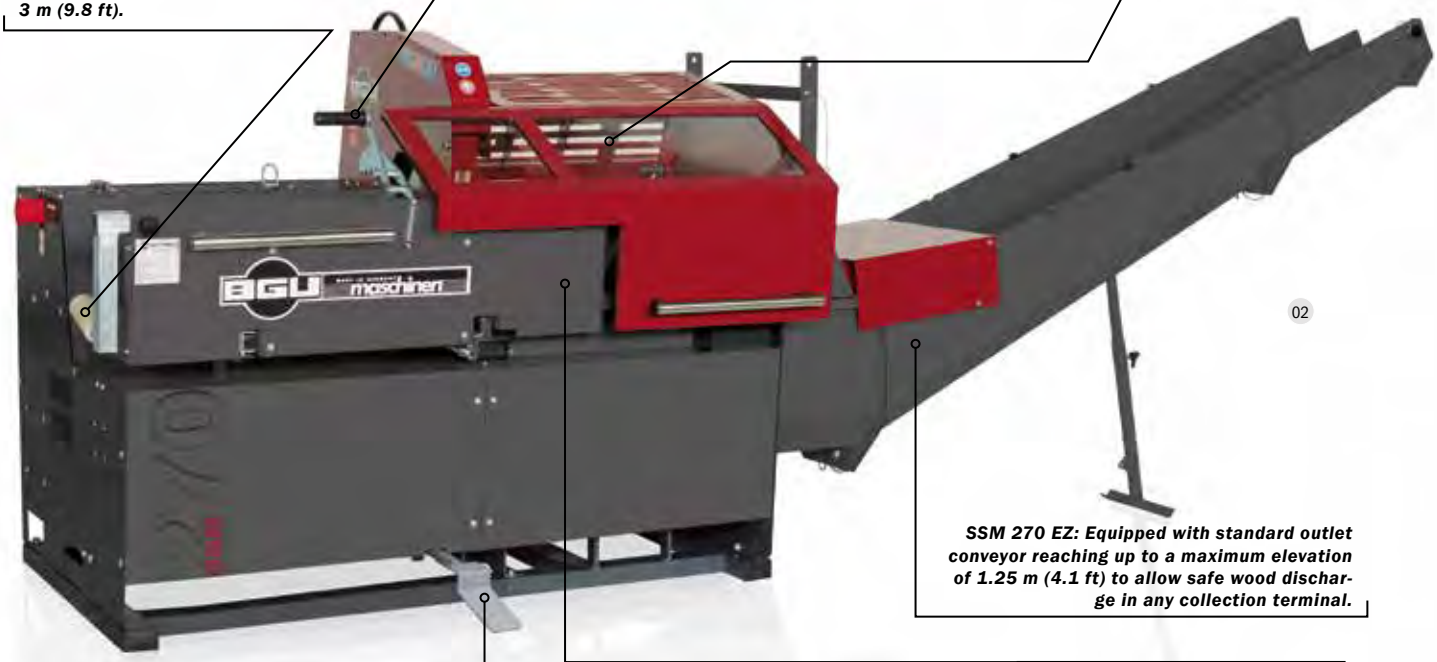

02

SSM 270 EZ: Equipped with standard outlet conveyor reaching up to a maximum elevation of 1.25 m (4.1 ft) to allow safe wood discharge in any collection terminal.

The splitter is started by a foot pedal control. The wedge position is adjustable up and down so the it is possible to split the log in 4 or 2 pieces depending on your requirements.

Every time when the safety grid over the splitter unit is lifted up, the hydraulic ram of the splitter is locked (interlock safety). For safety reasons the log splitter will not start while the safety grid is uplifted and the saw blade is fully enclosed beneath a safety hood.

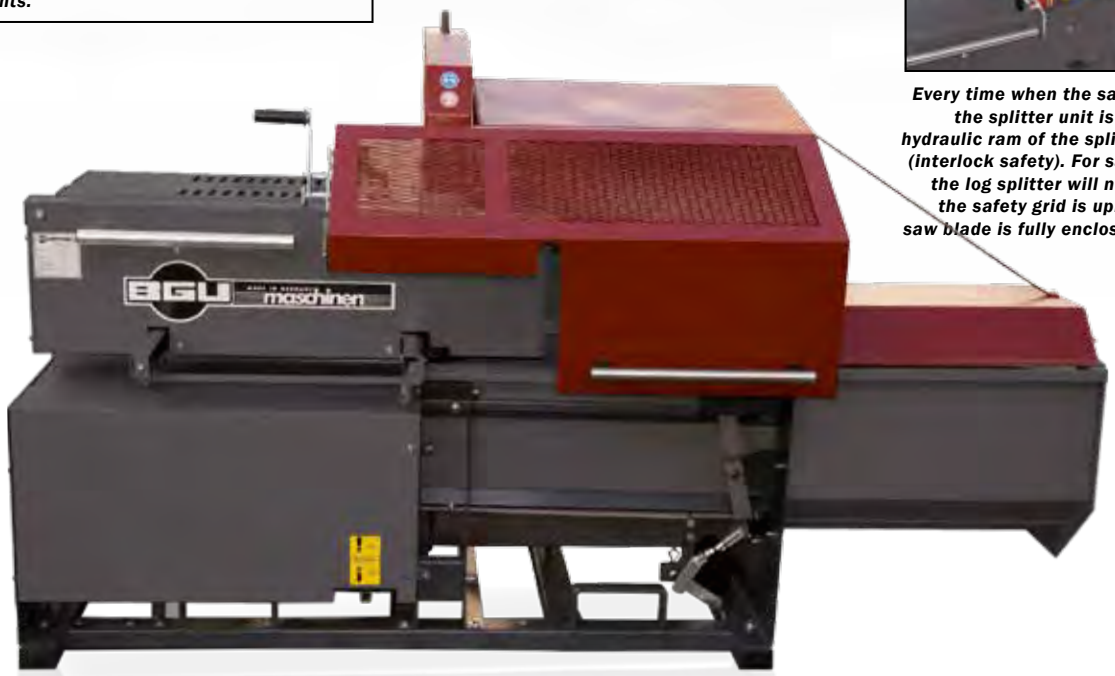

01

Without discharge channel

SSM 270 EZ:
Differential valve for increased ram forward speed (fast splitting cycle).

An extra-large hydraulic tank provides for consistent oil temperature even in case of continuous operation.

The splitter wedge can be quickly and safely raised/lowered to the required level by means of a control hand-lever.

A safety valve prevents accidental restart of the splitter, while the safety guard is up-lifted.

4-ways wedge: For a clean production of split logs, all in the same size.

Adjustable log length (250 – 500 mm / 9.8 – 19.7 in)

Unlimited use

Working mechanism and operation system: The machine attaches to the 3-point linkage of any agricultural tractor and operates from its rear power-take-off drive by means of a PTO shaft. Alternatively the machine is also available in an electric variant with built-in motor. The log splitter is controlled by a foot pedal. The logs are cut in 2 o 4 pieces depending on adjustment of the wedge height. The cut piece drops onto the log carriage in the splitter and an hydraulic driven push-block forces the log against the wedge and out of the splitting unit while the saw is ready for the next cutting cycle. This combination of two separate sections and simultaneous log advancing/cutting and splitting assures great time and money savings.

- Three-point linkage included
- Inbuilt hydraulic system for power drive through a PTO shaft
- Extensible infeed rollers providing additional support for long timber (up to 3.0 m = 9.8 ft)
- SSM 271 Z: basically without discharge channel and without differential valve
- SSM 270 EZ: Two-stage differential valve for increased ram forward speed splitting cycles, Equipped with outlet conveyor (reaching up to 1.25 m (4.1 ft) high and discharge into a pallet underneath). The conveyor folds up for transportation.
- Three-point hitch and PTO shaft on the back side of the machine
- Simple and easy to handle on a fork lift

02

Transport asset with outlet spout folded up and timber infeed rollers retracted.

Saw & splitter combination

Technical Data	01 SSM 271 Z	02 SSM 270 EZ
Power / motor	PTO shaft	PTO and 400V electric motor
Rated power	Tractor power: 12 kW / 16 PS	Tractor power: 12 kW / 16 PS E-Motor: 9,2 kW P_1 S6 40% ED
PTO shaft speed	420 rpm	420 rpm
Cutting capacity (log Ø)	approx. 270 mm	approx. 270 mm
Log (cutting) length	Adjustable: 250–500 mm	Adjustable: 250–500 mm
Blade diameter Ø	700/30 mm	700/30 mm
Dimensions (W x L x H)	4100 x 1350 x 1320 mm	4100 x 1350 x 1320 mm
Weight	approx. 570 kg (1256.6 lb)	approx. 670 kg (1477.1 lb)
Code No.	**95051**	**95048**

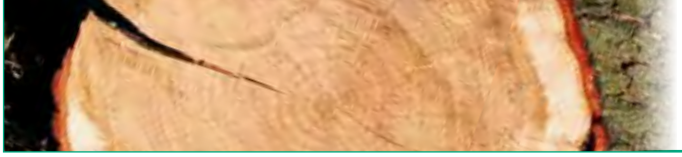

SÜMA
BGU MASCHINEN

BGU Log conveyor

Variants

TFB 4000 - telescopically	
	Length: 4,0 m (13,1 ft) extended and 2,55 m (8,4 ft) retracted Width: 250 mm (9,84 in)
Code No.	**92206**

FB 2500 - not telescopic	
	Length: 2,5 m (8,2 ft) Width: 250 mm (9,84 in)
Code No.	**92208**

TFB 5000 - telescopically	
	Length: 5,0 m (16,4 ft) extended and 3,05 m (10 ft) retracted Width: 400 mm (15,75 in)
Code No.	**92207/1**

FB 5000 - not telescopic	
	Length: 5,0 m (16,4 ft) Width: 400 mm (15,75 in)
Code No.	**92209**

Conveyance technologies

Specific for firewood production, BGU belt conveyors efficiently deliver ready-split firewood out of the machine into whatever transport or storage container parked downstream of the machine.

BGU belt conveyors will significantly ease your task and facilitate your work.
A choice of electric motor (either 230V or 400 V) or set of hoses and quick couplings for power take off from your tractor hydraulics is available. Depending on your requirements we can supply conveyors in length of 2,5, 4 or even 5 meters (8.2, 13.1 or 16.4 ft). All models can be easily cranked up and down to adjust their height safely.
All 4 and 5 m (13.1 – 16.4 ft) long belt conveyors are staged and can be retracted for storage and transportation purposes. So, for instance a 5 m (16.4 ft) long belt-conveyor can be retracted to approximately 3 m (9.8 ft) length.

- Multifunctional (universal use)
- Wheel arrangement
- Height is manually adjustable with a crank lever
- Basic version without drives
- Conveyor belt powered by either hydraulic motor or electric motor

Actuators

Hydromotor-operated belt conveyor		
		with hoses and quick couplings; power take-off from the tractor
	Code No.	**92212**

Belt conveyor powered by:		
		400 V E-Motor with gears
	Code No.	**92210**
		230 V E-Motor with gears
	Code No.	**92211**

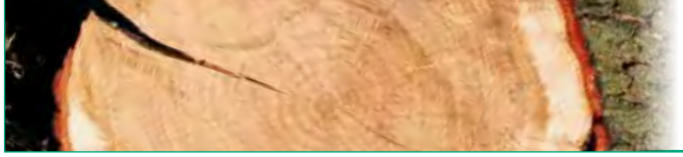

SÜMA
BGU MASCHINEN

BGU Automatic Chainsaw Processor

- **KSA 380 Z**
- **KSA 380 E**

The hydraulic chainsaw unit is equipped with a long chainsaw bar operated by the user all the way down through the timber.
In this partially manual system, the operator regulates the pressure on the timber and, consequently, the cutting speed based on timber thickness and diameter.

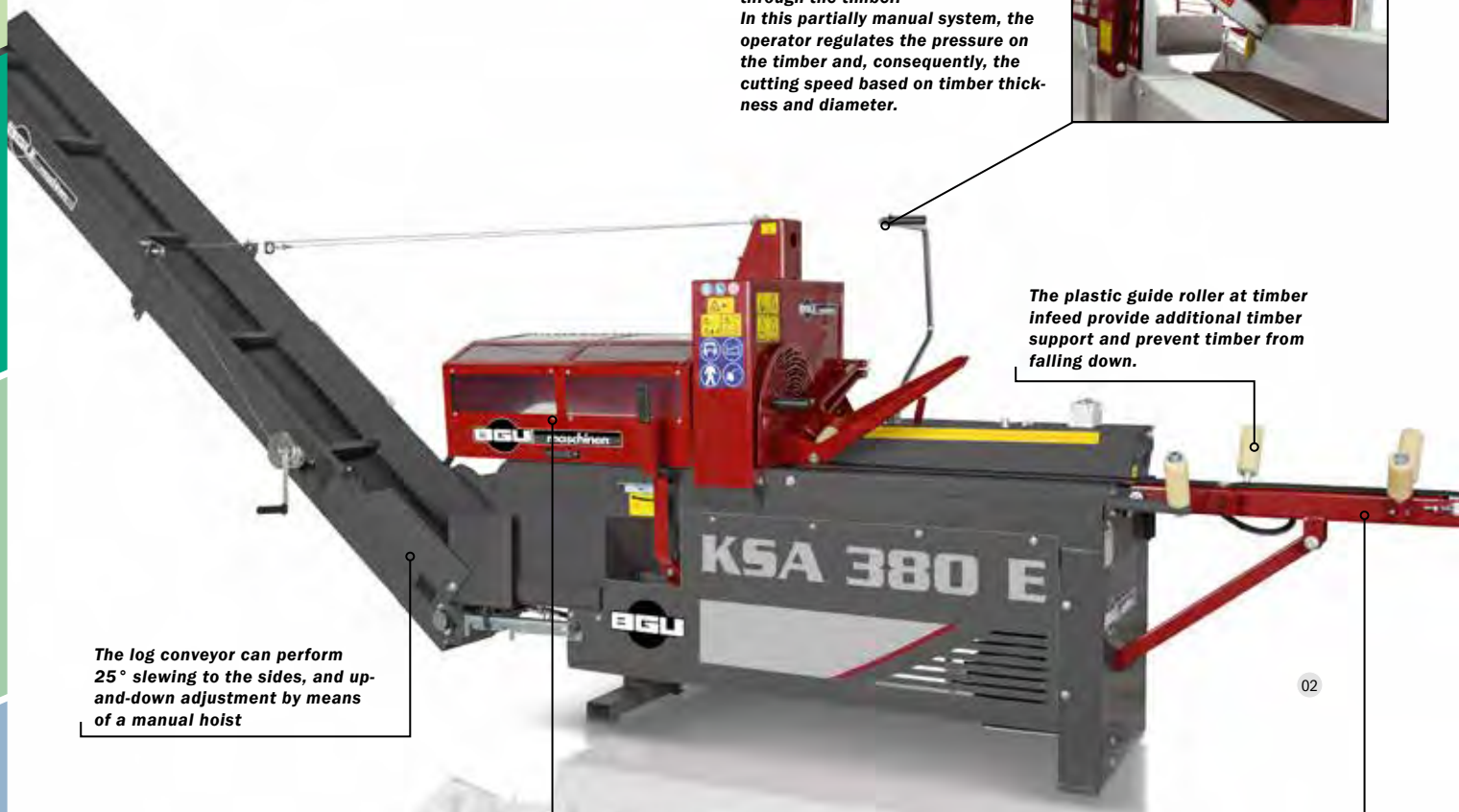

The plastic guide roller at timber infeed provide additional timber support and prevent timber from falling down.

The log conveyor can perform 25° slewing to the sides, and up-and-down adjustment by means of a manual hoist

Very fast splitting cycles

The 2000 mm (6.5 ft) long infeed belt also works as an extended timber table.

02

Accessories for KSA 380

4-way splitter wedge

	for KSA 380
Code No.	90097

Heavy-duty chainsaw bars

	3/8˝ / 1,5
Code No.	95073

6-way wedge (star-shaped)

	for KSA 380
Code No.	90018

Spare saw chain

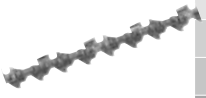

	3/8˝ / 1,5 / with 57 sprockets
Code No.	95071

PTO shaft

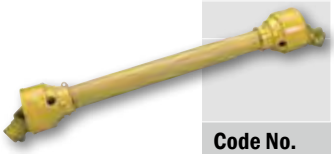

	Class. 1, 1 3/8“
	6 splines, 1 m (3.3 ft) long
	for all PTO saws and splitters as well as for all winches up to FSW 4.5
Code No.	95060

A special inbuilt, adjustable length stop is designed to help accurately position and cut the log in any length between 20 and 60 cm (7.9 – 23.6 in). Wedge lift is performed up and down in 6 different positions by means of a special ergonomic hand lever.

Special V-shaped carriage makes it easier to accommodate and split small, crooked or deformed timber that safely rolls down to the bottom and therefore perfectly centred against the wedge.

A multifunctional control lever is used to engage the saw. Pull it down to the first step to operate the chain saw and start cutting and hold it in position until the chainsaw has completely cut the timber through. This system has the additional benefit of avoiding waste of saw chain oil.

Hydraulic quick couplings Coupling arrangement for attachment of a timber deck or rack to be controlled by the multifunctional lever to advance timber on a roller belt to the saw.

Accurate finish in all details: the machine is standing on square channels for handling on a fork lift or trolley. Alternatively, they can be used or fitting on the lower pins of the 3-point hitch and transport the machine on your tractor.

Saw & Splitter Combination for timber diameter up to 37 cm

- Noiseless chainsaw operation
- The oversized pumping capacity (45 l/min = 9.9 gal/min) ensures faster splitting cycles; Moreover, saw-cutting and splitting can be controlled and executed nearly concurrently even with soft, thinner timber
- Two hydraulic pumps with two separate circuits:
- 1 pump for log splitter operation (45 l/min = 9.9 gal/min) and 1 pump for chainsaw and infeed belt operation (30 l/min = 6.6 gal/min)
- Emergency splitter stop by means of a safety hand-lever control
- Multifunctional control lever designed for controlling four machine functions
- Hydraulic log conveyor
- Standard oil cooler to allow for trouble-less, non-stop operation.
- 4-way wedge included in price

01

Automatic Chainsaw Processors

Technical Data	01 KSA 380 Z	02 KSA 380 E
Power / motor	PTO shaft	400 V Electric motor + 32 A EC plug, Delta-star switch
Rated power	Tractor power: 20 kw /27 PS	E-Motor: 7,5 kW P_2 / 9,5 kW P_1
PTO shaft speed	420–450 rpm	–
Cutting capacity (log Ø)	max. 370 mm	max. 370 mm
Log length	Adjustable: 200–520 mm	Adjustable: 200–520 mm
Chainsaw bar	15˝/380 mm	15˝/380 mm
Chain	3/8˝ / 1,5 / 57 TG	3/8˝ / 1,5 / 57 TG
Oil capacity	42 l	42 l
Splitting power	9 t	9 t
Output	4–6 cord/h	4–6 cord/h
Length of the conveyor	4200 mm	4200 mm
Width of the conveyor belt	300 mm	300 mm
Elevation of the log conveyor	max. 2700 mm	max. 2700 mm
Transport dimensions (W x L x H)	2780 x 1100 x 2550 mm	2780 x 1100 x 2550 mm
Weight	approx. 825 kg (1818.8 lb)	approx. 825 kg (1818.8 lb)
Code No.	**91916**	**91915**

SÜMA BGU MASCHINEN

Accessories Bandsaw mills

Rail extensions

	2.25 m (7.4 ft) extension with connection and fixation hardware
	BBS 500 and BBS 500 B
Code No.	**90791**

	BBS 750 E
Code No.	**90893**

	BBS 750 EV
Code No.	**90891**

Bimetal Saw Band, Type I for BBS 500 (tooth pitch 8.3 mm = 0.32 in)

	27 x 0,9 x 3110 mm
Code No.	**90792**

Bimetal Saw Band, Type I for BBS 500 B (tooth pitch 8.3 mm = 0.32 in)

	27 x 0,9 x 3340 mm
Code No.	**90788**

Bimetal Saw Band, Type I for BBS 750 (tooth pitch 22 mm = 0.86 in)

	34 x 0,9 x 4140 mm
Code No.	**90896**

Bimetal Saw Band, Type II for BBS 500 (tooth pitch 12.8 mm = 0.5 in)

	27 x 0,9 x 3110 mm
Code No.	**90793**

Bimetal Saw Band, Type II for BBS 500 B (tooth pitch 12.8 mm = 0.5 in)

	27 x 0,9 x 3340 mm
Code No.	**90787**

Bimetal Saw Band, Type II for BBS 750 (tooth pitch 22 mm = 0.86 in)

	34 x 1,1 x 4140 mm,
Code No.	**90897**

Bimetal Saw Band, Type III for BBS 500 (tooth pitch 22 mm = 0.86 in)

	34 x 0,9 x 3110 mm
Code No.	**90794**

Bimetal Saw Band, Type III for BBS 500 B (tooth pitch 22 mm = 0.86 in)

	34 x 0,9 x 3340 mm
Code No.	**90789**

Bimetal Saw Band, Type III for BBS 750 (tooth pitch 22 mm = 0.86 in)

	41 x 1,1 x 4140 mm
Code No.	**90899**

Pack and store firewood!

SÜMA
BGU MASCHINEN

BGU Bundling Systems

- **HBG 100/2 Euro-Kombi**
- **HGB 100 HS**

Safe storage of the polyester textile band and the nylon line for efficient uncoiling performance.

Hydraulic tensioner for HBG 100/2 (Code No. 90220)

Compact design and construction

HBG is equipped with an inbuilt steel box for safe and clean storage of clamps, aluminium clips and other tools so that they can be always at reach when needed.

Use of the special EC-Combi-mount makes it possible to attach the machine either to the loader front or to the three-point hitch in the back.

The ratchet tensioner fits all models and can be also retro-fitted.
It is the affordable alternative to any hydraulic tensioner or strapper.
(Code No. 90222).

BGU-MASCHINEN VIDEO CLIPS
You may download demo video from the Internet:
www.bgu-maschinen.de/service

Said and done:

1. Bundling
for bundling wood in Euro pallet size, as commonly in use at most firewood retailers

2. Wrap and pack on Europalettes.

3. Shrink wrapped. Ready for sale!

A flawless mechanism

BGU bundlers allow on-site baling of your logs for quick further delivery to storage or shipment to the customers saving time and costly intermediate handling operations.

Our bundlers are compatible with the following log lengths: 330 mm / 500 mm / 1000 mm (13/ 19.6/ 39.4 in) Logs just need to be loaded with one end to the upper stop plate and wrapped with a nylon strap using the ratchet chain bundler, or alternatively with a polyester-fabric band (tear resistance 750 kg = 1653.5 lb) and steel buckles using the manual strapping machine.

- The machine can be transported on the three-point-hitch of any tractor or on a front loader.
- Integrated tensioner
- Compressed and banded wood bundles are conveniently ejected from either one side
- One 140 m (460“) nylon strap coil on HBG100/2 provides for approx. 15 bundles with lacing on both sides

01

- Attaches to any front loader with Euro-mount

02

- Same fittings and accessories as HBG 100/2, however with hydraulic cylinder tensioner, hydraulic hoses, steel rope with chain and hooks, and control valve with fixation hardware. Without ratchet.

For more accessories please see page 44

Firewood packing/bundling systems

Technical Data	01 HBG 100/2 Euro-Kombi	02 HBG 100 HS
Log length	330/500 or 1000 mm	330/500 or 1000 mm
Dimensions (W x L x H)	1215 x 1200 x 1400 mm	1215 x 1200 x 1400 mm
Weight	approx. 232 kg (511 lb)	approx. 250 kg (551 lb)
Code No.	**90101/2**	**90128**

SÜMA BGU MASCHINEN

Accessories BGU Bagging Systems

2-stroke hydraulic cylinder for HBG bundlers 100/2

Ancillary equipment:
2-stroke cylinder and 1.5 m (4.9 ft) hose with quick coupling for more convenient tip-over when working on a front loader (easy to retrofit, if needed later on)

Code No. **90211**

Hydraulic tensioning roller for HBG 100/2

retro-fitting on all HBG 100/2 from manufacturing year 2012, including: a cylinder mount, a cylinder with hoses, valve, strapping cord, chain and hook

Code No. **90224**

Round bale net: 1 800 m x 0.60 m (5905.5 x 1,96 ft) (height)

1 piece is sufficient for 40-50 packs

Code No. **97180**

Polyester textile band

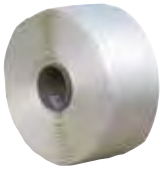

19 mm x 500 m (0.74 in x 1640.4 ft)
Tear resistance: 725 kg (1598.3 lb)

Code No. **90118**

Steel tube adapter

to unwind the polyester textile band

Code No. **90124**

Nylon (polypropylene) strap uncoiler

HBG 80/2
and HBG 100/2

Code No. **90221**

Nylon rope, diam. 8 mm

Tear resistance 1100 kg (2425 lb), 100 m (328 ft) coil

Code No. **90203**

Nylon rope, diam. 10 mm (0.4 in)

Tear resistance 1700 kg (3747.8 lb), 100 m (328 ft) coil

Code No. **90204**

Ratchet tensioner

Retrofitting on both models

Code No. **90222**

Wrapping set with polyester band

wrapping set includes:
a) Band strapping machine (10-19 mm = 0.4 – 0.75 in)
b) Portable uncoiler
c) Polyester textile band (Width: 19 mm = 0.75 in, Length: 500 m = 1640.4 ft, tear resistance: 725 kg = 1598.3 lb)
d) Box of steel buckles (1000 pcs). Buckles width: 19 mm (0.75 in)

Code No. **90117**

Steel buckles width 19 mm (0.75 in), 1 box = 1000 pcs.

(1000 pcs). Buckles width: 19 mm (0.75 in)

Code No. **90119**

Profi tensioner

10–19 mm

Code No. **90116**

Accessories for BGU Pack-Systems

S/I mesh bag with strap for BGU Pack-System PS 1000

	1.000 l, 180 x 140 cm, 20 Stück
Code No.	**91923**

S/II mesh bag with strap for BGU Pack-System PS 1000

	1.500 l, 225 x 140 cm, 20 Stück
Code No.	**91924**

Mesh bag with strap for BGU Pack-System PS 300

	60 l, 60 x 80 cm, 20 Stück
Code No.	**91921**

Mesh bag with strap for BGU Pack-System PS 300

	80 l, 60 x 100 cm, 20 Stück
Code No.	**91922**

SÜMA BGU MASCHINEN

BGU Log grapples

- **HVZ 1300**

For more accessories please see page **52**

A low-cost alternative for small timber contractors and tractor power from 30-60 kW.
Log grapples for front loader with EC-Mount, including:

- HVG 1300 grapples
- Universal joint
- 3.0 t (2.95 lt) rotator - 900 Nm
- Efficient and safe timber handling
- Modern proven technology
- Equipped with standard rotator
- Suitable for front loaders with only one double-acting control valve
- Optional safety skid
- Optional electric reversing valve (Code No. 96270)

Logging tongs	
Technical Data	HVZ 1300
Power	From the tractor hydraulics
Tractor power requirement	40 kW / 55 PS
Opening range	HG 1300 (90–1280 mm)
Clamping force	9,5 t
Weight without skid	approx. 230 kg (507 lb)
Code No.	**96243**

• HRZ Fix-Euro/Kombi

Combination log loader
Mounting to both front and rear loaders with 3-point hitch cat. II. Tractor power requirement 40 - 90 kW.

- Including HG 1300 grapples
- Universal joint
- Pivotal hanger for 160° grapple rotation.

NEW
now also with optional LOGGING WINCH available!

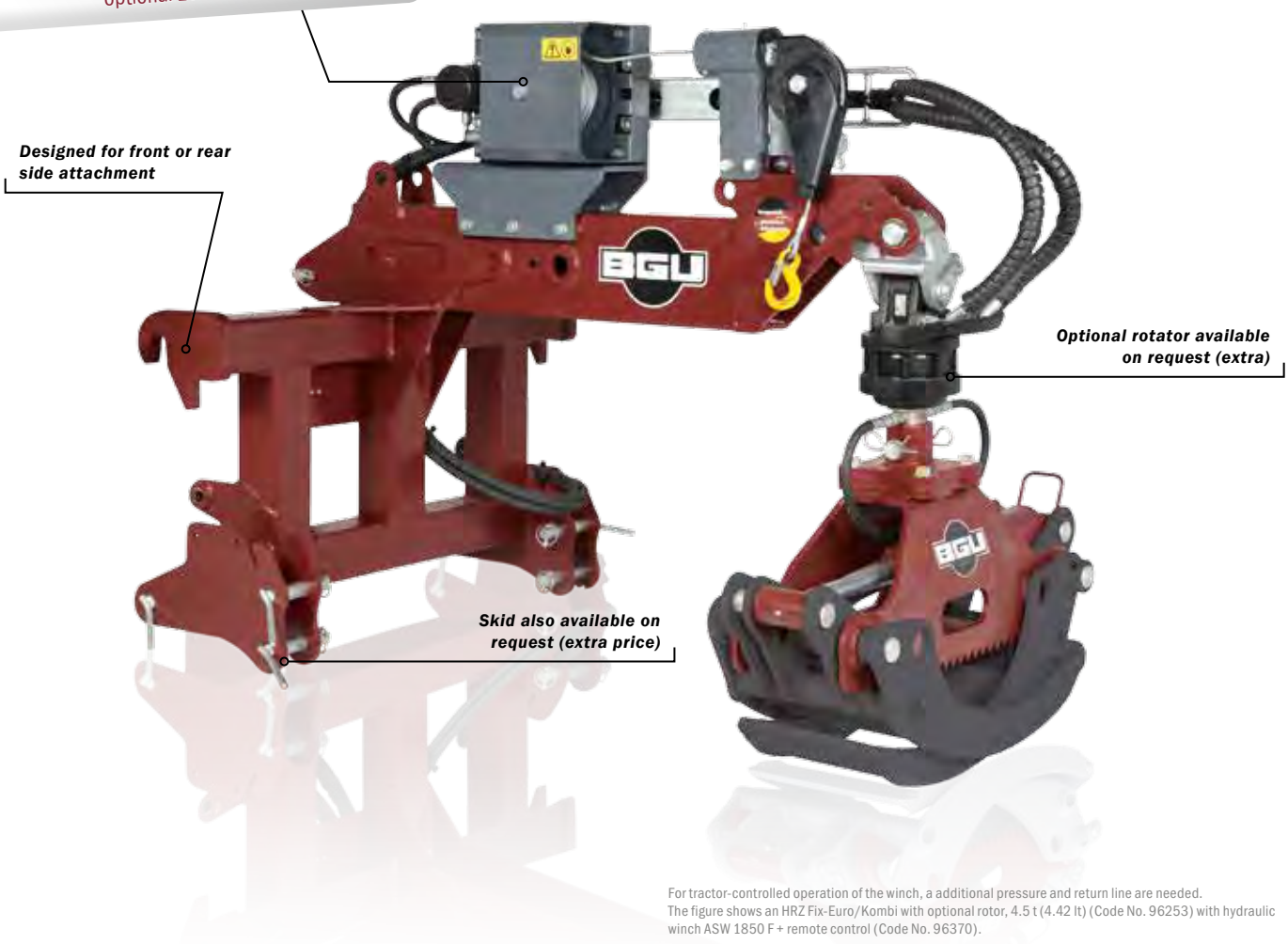

For tractor-controlled operation of the winch, a additional pressure and return line are needed.
The figure shows an HRZ Fix-Euro/Kombi with optional rotor, 4.5 t (4.42 lt) (Code No. 96253) with hydraulic winch ASW 1850 F + remote control (Code No. 96370).

Attachments: (see page 52)

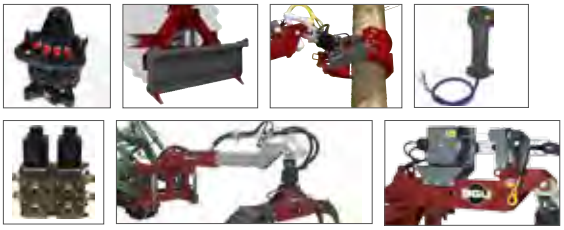

Log grapple	
Technical Data	HRZ Fix-Euro/Kombi
Power	From the tractor hydraulics
Tractor power requirement	40 kW / 55 PS
Opening range	HG 1300 (90–1280 mm)
Clamping force	9,5 t
Weight without skid	approx. 248 kg (546,7 lb)
Code No.	**96240**

SÜMA BGU MASCHINEN

BGU Log grapples

• HRZ Lader

Combination unit - Handling and Loading

Rear mount to 3-point hitch class II. Tractor power requirement 40 - 90 kW comprising:

- HG 1700 grapples
- 600 mm AS–Mechanical extension arm
- Hydraulic rotary actuator for 180° boom slewing, slewing force 12 t
- Lifting capacity: 12 t at approx 3500 mm boom reach.
- Moment: 1.8
- Universal joint
- Pivotal hanger for 160° grapple rotation.

This very professional unit is complemented by an optional Hightech proportional control valve in 6 segment construction (3 proportional valves, 3 S-W and 1 floating) Code No. 96308

Optional with AS hydraulic extension arm.

Hydraulic top-swivel-grapples available on request (Extra)

Optional rotator available on request (extra)

Skid available on request (Extra)

Attachments: (see page 52)

The figure shows an HRZ Log Loader with optional rotor, 4.5 t (Code No. 96255), hydraulic AS-Outreach (Code No. 96265), top swivel system (Code No. 96260) and 1500 mm skid (Code No. 96256), and proportional control valve (Code No. winch ASW 1850 F + remote control (Code No. 96365)

Log grapple	
Technical Data	HRZ Lader
Power	From the tractor hydraulics
Tractor power requirement	40 kW / 55 PS
Opening range	HG 1700 (90–1680 mm)
Clamping force	9,5 t
Weight	approx. 395 kg (870 lb)
Code No.	**96250**

BGU Timber loader

- **HRK**

Timber loader for rear attachment to a three-point hitch of a tractor hydraulics. Suitable for diverse applications including tree felling, loading, and skidding. Attaches to the rear 3-point hitch Cat II of any tractor with power 45 to max. 90 kW.

- Including HG 1300 grapples
- Hydraulic rotary actuator for 180° boom slewing, slewing force 12 t
- Length of the articulated arm: 1500 mm - Max. capacity at 1.8 m reach: 950 kg and 450 kg (including grapple) at 3.8 m.
- Universal joint
- AS – 1100 mm hydraulic extension arm
- Rotator – 1400 Nm, 4.5 t at 195 bar
- Complete with skid, and axle with 2200 mm wheel base and 260/70-15.3˝ tires
- **Incl. Grapple - Top swivel system (Code No. 96260) and ergonomic control station (Code No. 96301)**

For more accessories please see page **52**

NEW

now also with optional **LOGGING WINCH** available!

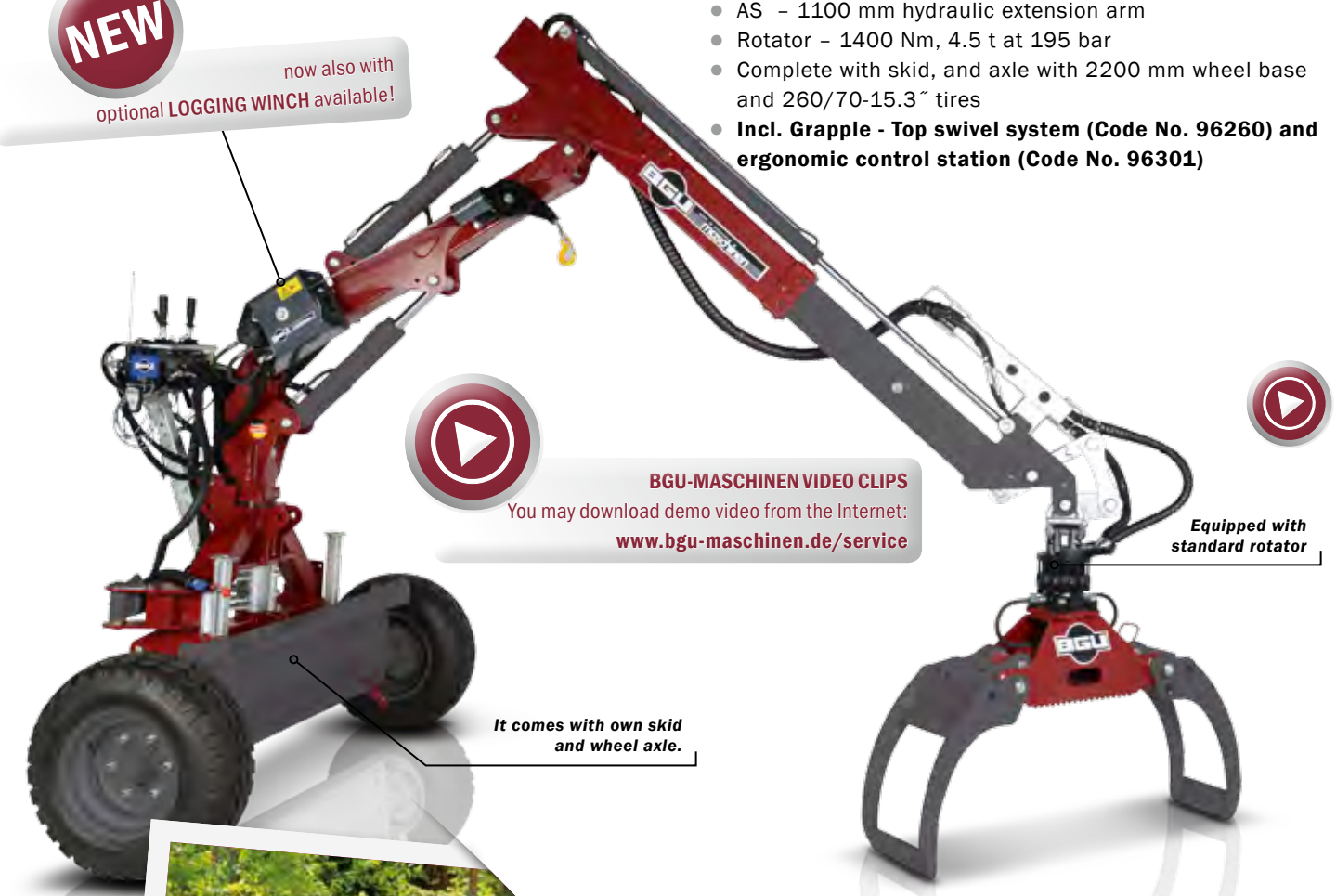

BGU-MASCHINEN VIDEO CLIPS
You may download demo video from the Internet:
www.bgu-maschinen.de/service

Equipped with standard rotator

It comes with own skid and wheel axle.

The picture shows a HRK with optional winch ASW 1850 F + remote radio control (Code No. 96360) and ergonomic control station (Code No. 96301).

Timber loaders

Technical Data	HRK
Power	From the tractor hydraulics
Tractor power requirement	45 kW / 62 PS
Opening range	HG 1300 (90–1280 mm)
Clamping force	9,5 t
Weight	approx. 850 kg (1874 lb)
Code No.	**96300**

SÜMA
BGU MASCHINEN

BGU Modular Logging System

Timber loader with attached PTO logging winch.

Hydraulic top-swivel-grapples

The perfect logger kit:

Hydraulic winch ASW 1850 F		
		with idle, 1850 kg pull force, 30 m wire rope length, and Ø 8 mm
		Remote operation through a 3-channel radio control, including solenoid valve, a receiver, a pocket-sender with belt clip
		adapter and wire rope pulley
		Retro-fitting to all BGU loaders from the year 2013 onwards
		for HRZ-Fix-Euro/Kombi
	Code No.	**96370**
		for HRZ Lader
	Code No.	**96365**
		for HRK
	Code No.	**96360**

Vertility and efficacy for all logging contractors

BGU timber grapples and loaders feature a very rugged construction for superior performance even for demanding applications.

Special, modular construction system fitting individual retrofitting requirements make our equipment outright incomparable for a vast number of possible applications matching all needs of forestry and logging contractors.

The modular system conception ensures top performances and nearly universal use.

SÜMA BGU MASCHINEN

Optional tools and attachments:

	Wheel axle	Rotator 4,5 t	Rotator 4,5 t
	comprising 2 axle mounts with wheels for bolting on the skid. Wheel base: 2200 mm Tires: 260/70˝-1/-15.3˝	1400 Nm, 4.5 t at 195 bar, Flange 140x140 4xM16 Weight: 25 kg. (55 lb) Recommen-ded for swivelling grapples (also available lose with set of hoses)	1200 Nm, 4.5 t at 230 bar, Flange 140 x 140 4 x M16 Weight: 22 kg (49 lb) 25 bores
HVZ 1300			
HRZ Fix-EZ		•	•
HRZ Fix-Euro/Kombi		•	•
HRZ Lader	•	•	•
HRK	✓	✓	
Code No.	**96251**	**96255**	**96278**

	Skid upper pin unit	Hydraulic control valve, 3 seg-ment construction	Hydraulic control valve, 4 seg-ment construction
	for front and rear skids	Section construction, single joystick	Section construction, single joystick
HVZ 1300			
HRZ Fix-EZ		•	
HRZ Fix-Euro/Kombi	•	•	•
HRZ Lader	•	•	•
HRK	•		
Code No.	**96257**	**96262**	**96263**

- ● Possible expansion
- ✓ Adjustable log stop

Rotator 3,0 t	Skid 1500 mm (60 in)	Front skid	AS hydraulic extension arm
900 Nm, 3.0 t at 200 bar, endless, Shaft Ø 49.5 mm (19.5 in), weight: 18 kg (39 lb), Suitable for small grapples and log loaders. 25 bores	userfriendly installation 1500 mm (60 in), 2 backhoe teeth	user-friendly installation; skid width 1025 mm (41 in); Weight: 52 kg (115 lb)	600 mm only possible with initial fitting-out
✓		●	
	●		●
	●		●
	✓		✓
96277	**96256**	**96288**	**96265**

Hydraulic control valve, 5 segment construction	Hydraulic control valve, 6 segment construction
Section construction, single joystick	Section construction, single joystick
●	●
96264	**96268**

SÜMA BGU MASCHINEN

Optional tools and attachments:

	AS-Extension arm 600 mm	Joystick-operated machines	Proportional control valve
	Mechanical (Delivery time: 34 weeks from confirmed purchase order) Strictly possible for HRZ Fix-Euro/ Kombi only possible with initial fitting-out	Radio controllable functions: Rotator left/right, grapple open/ close Retro-fitting on prior purchases for use as control lever of the front loader	in 6 segment construction (3 proportional valves, 3 S-W and 1 floating), completely pre-assembled ready for use and controllable with multifunctional control joystick (for all functions in one lever).
HVZ 1300		•	
HRZ Fix-EZ			
HRZ Fix-Euro/Kombi	•	•	
HRZ Lader	✓		•
HRK			
Code No.	**96242**	**96275**	**96308**

	Grapple - Top swivel system	Switching valve with two operating power supplies	Reversing control valve with three functions
	Hydraulic Operation 180° rotation range only possible with initial fitting-out	Electromagnetic 12 V- Electric power	Electromagnetic 12 V- Electric power
HVZ 1300		•	
HRZ Fix-EZ	•	•	
HRZ Fix-Euro/Kombi	•	•	•
HRZ Lader	•		
HRK	✓		
Code No.	**96260**	**96270**	**96271**

- ● Possible expansion
- ✓ Adjustable log stop

Proportional control valve	HVG 1300	HG 1300	HG 1700
in 7 segment construction (4 proportional valves, 3 S-W and 1 floating), completely pre-assembled ready for use and controllable with multifunctional control joystick (for all functions in one lever).	Opening range: 90–1280 mm, Clamping force 9,5 t, Weight: 100 kg (220 lb)	Opening range: 90–1280 mm, Clamping force 9,5 t, Weight: 118 kg (260 lb)	Opening range: 90–1680 mm, Clamping force 9,5 t, Weight: 148 kg (326 lb)
	✓		
		●	✓
		✓	●
		●	✓
●		✓	●
96309	**96315**	**96314**	**96316**

Hydraulic winch ASW 1850 F			Directional slide valve
with idle, pull force 1850 kg (4079 lb), 30 m (98 ft) wire rope length and Ø 8 mm. Remote operation through a 3-channel radio control, including solenoid valve, a receiver, a pocket-sender with belt clip, adapter and guide roll for pull rope. Retro-fitting is possible on all BGU timber grapples from the year 2013 onwards.			mandatory for use with hydraulic top-swivel-grapples
			●
●			●
	●		●
		●	●
96370	**96365**	**96360**	**96273**

SÜMA
BGU MASCHINEN

BGU Metal band grinders

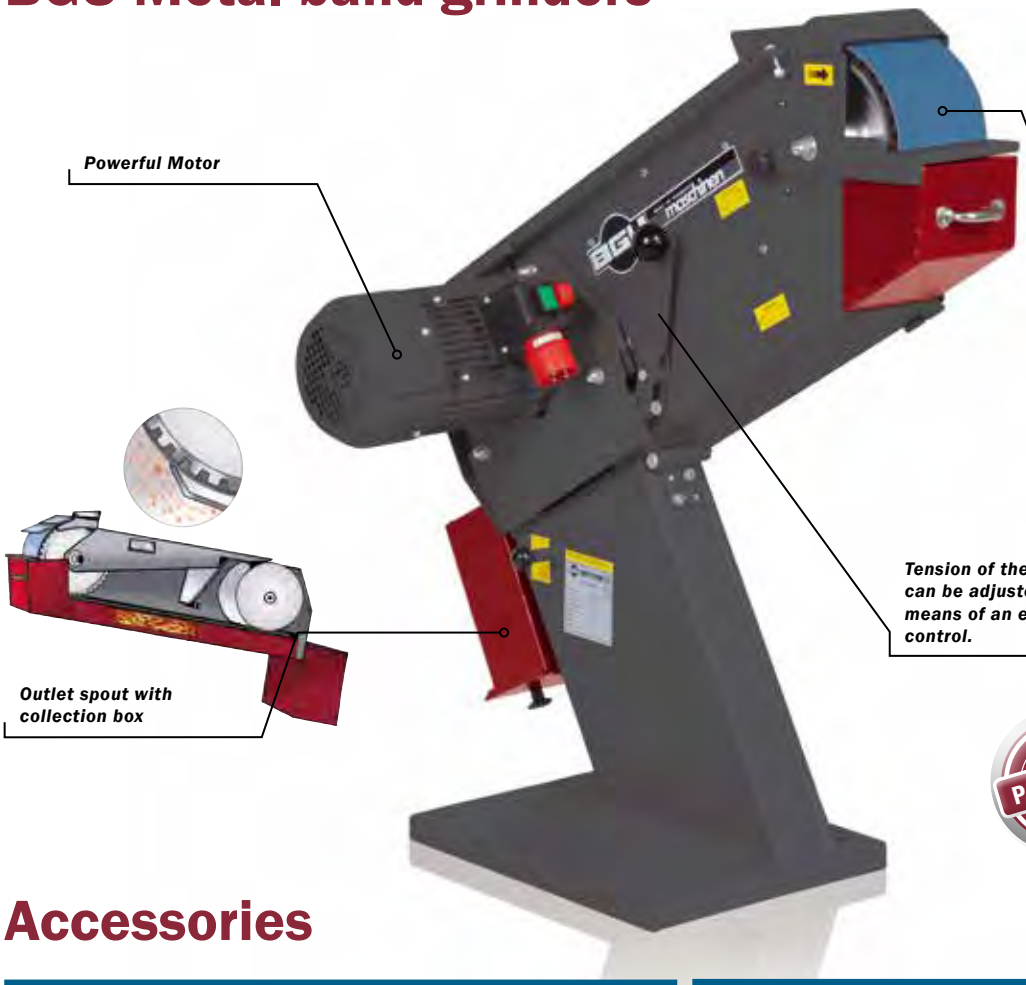

PATENTED!
BGU-Maschine with new patented attributes

Accessories

Spare band 2000 x 75 mm

	Grit size 40
Code No.	90552
	Grit size 60
Code No.	90553
	Grit size 80
Code No.	90554
	Grit size 100
Code No.	90555

Spare band 2000 x 150 mm

	Grit size 40
Code No.	90562
	Grit size 60
Code No.	90563
	Grit size 80
Code No.	90564
	Grit size 100
Code No.	90565

Adapter for dust extractor MBS 751

	for hose Ø 100 mm
Code No.	90551

Adapter for dust extractor MBS 1501

	for hose Ø 100 mm
Code No.	90561

Metal band grinder for the industry and crafters

A 250 mm (10 in) large diam, serrated contact wheel combined to a really powerful motor provide for excellent grinding quality and performance.
Powerful material intake and a belt speed of 37 m/s (122 ft/sec) assure a very efficient performance and excellent finish.

- Quick changing and setting from horizontal to angled belt position
- Vibration free, smooth running
- Solid work table for end-feed grinding
- Belt speed of 37 m/s (122 ft/sec) ensuring a very efficient performance and excellent finish.
- Efficient material removal for more production economies
- 250 mm (10 in) large contact wheel
- Dust and chips outlet to collector box
- Dust disposal in a special metal box collector

Thanks to a solid work table it is possible to accommodate (in horizontal position) longer workpieces for end-feed grinding.

Band tracking is very quickly done with no need of ancillary tools or instruments by just turning the special black knob on one side of the contact wheel (Patent no. 4131523).

An outlet spout beneath the entire grinding band length ensures efficient removal of dust and chips that are safely disposed inside the special in-built box. Patent Nr. 0399155.

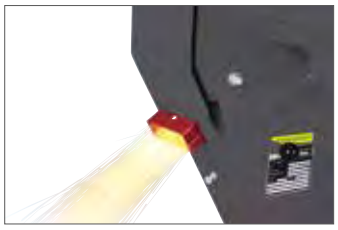

Grinding dust, chips and sparks caused by contact wheel revolutions are efficiently and safely cleared away from the work area through the spout.

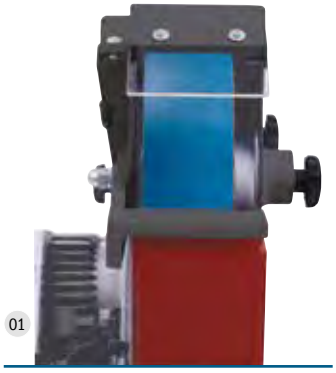

01

- Grinding band width: 75 mm (3 in)

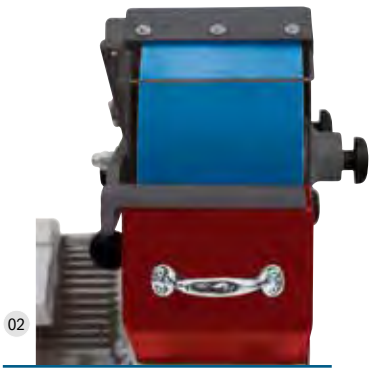

02

- Grinding band width: 150 mm (6 in)

Metal band grinders		
Technical Data	01 MBS 751	02 MBS 1501
Power / motor	Electric, 400 V, 16 A EC plug	Electric, 400 V, 16 A EC plug
Rated power	4,0 kW P_2	4,0 kW P_2
Band size	75 x 2000 mm	150 x 2000 mm
Contact wheel	250 x 75 mm	250 x 150 mm
Band speed	37 m/s	37 m/s
Horizontal work table	75 mm continuous	150 mm continuous
Weight	approx. 96 kg (211 lb)	approx. 114 kg (251 lb)
Code No.	**90550**	**90560**

SÜMA
BGU MASCHINEN

BGU Press drills

- **SB 320 SH/1**

Accessories:

Quick-action vice

	revolving over 360° with hardened steel jaws. Jaw width 120 mm (4.7 in)
Code No.	**90499**

Screw vice

	revolving over 360° with hardened steel jaws. Jaw width 125 mm (4.9 in)
Code No.	**90498**

400 mm (16 in) cross sliding table with clamping tabletop

	300mm (12 in) longitudinal and 150 mm (6 in) transverse displacement Rugged cross slide vice with adjustable dovetail ways.
Code No.	**90497**

Modern, up-to-date technology makes expensive tools

Digitally display of rotation count

- Heavy-duty pole diameter: 100 mm (4 in)
- Increased stability thanks to a robust base plate of cast iron
- Head tilts right and left (for cutting threads)
- Suitable for a wide drilling range up to 31.5 mm (1.25 in) wide holes with changer for speed variation (stepless adjustment of the spindle speed)
- Accurate and robust spindle seating to allow use of different milling/facing attachments (accessories)
- Ergonomic, easy accessible control board

- Drilling up to 31.5 mm (1.25 in) holes

Press drills

Technical Data	01 SB 320 SH/1
Power / motor	Electric, 400 V, 16 A EC plug
Rated power	1,3 kW P_1
Drilling capacity on solid material	27 mm
Tool holder	MK 3
Runout	230 mm
Spindle stroke	130 mm
Spindle height	min. 150 mm
Spindle height above table	max. 750 mm
Spindle speed	approx. 100–1600 rpm
Table size	400 x 320 mm
Base plate	380 x 540 mm
Dimensions (W x L x H)	650 x 840 x 1720 mm
Weight	approx. 320 kg (705 lb)
Code No.	**90488**

SÜMA BGU MASCHINEN

BGU Metal bandsaws

• BSM 190 G

Quick clamping chuck with round bar guides. Clamping by means of eccentric lever.

Metalworking band saws for craftsmen and workshops.

- Automatic blade shut-off at the end of cut
- Standard radiator
- Standard millimetre cut-length stop and clamping arrangement
- Quick clamp vice
- Fitted with oil-bath planetary gear box for quiet, smooth operation
- Ergonomic floor base with worktable at 720 mm (28.3 in)
- Infinite adjustment of the mitre cut angle
- Large cutting capacity even for acute angles up to 60°
- Band tension and blade break-in safety (control system)

Metal bandsaws

Technical Data	BSM 190 G
Power / motor	Electric motor 0,85/1,2 kW P_2
Rated power	400 V 16 A EC plug
Cutting speed	35 / 70 m/min.
Saw band	2480 x 0,9 x 20 mm
Dimensions (W x L x H)	1200 x 700 x 1200 mm
Weight	approx. 201 kg (443 lb)
Code No.	**90716**

Cutting range BSM 190 G (mm)

∢	●	■	▮	▬
90°	190	190 x 190	230 x 170	220 x 190
45°	155	155 x 155	155 x 155	155 x 155
60°	110	70 x 70	115 x 70	115 x 70

Accessories

Replacement belt BSM 190 G

	Please mind for tooth pitch! Vario M 42 2480 x 0,9 x 20 mm
	Tooth pitch 4-6
Code No.	**90718**

Replacement belt BSM 190 G

	Please mind for tooth pitch! Vario M 42 2480 x 0,9 x 20 mm
	Tooth pitch 6-10
Code No.	**90717**

- **BSM 231/1 DG**

Mitre cuts are accurately adjustable at 90°, 45° and 60°.

Designed for continuous applications!

- Automatic blade shut-off at the end of cut
- Standard radiator
- Standard millimetre cut-length stop and clamping arrangement
- Semi-automatic mitring 60° left and 45° right
- Swivelling cutting head
- Feed pressure adjustment by means of a hydraulic down-feed cylinder
- Widia band guide
- Automatic chips removal
- Quick clamp vice moving to the left and the right.

Material	Tooth pitch	Material	Tooth pitch
s (mm)	ZpZ	s (mm)	ZpZ
1 – 2	10/14	**bis 20**	6/10
2 – 4	8/12	**20 – 40**	5/8
4 – 8	6/10	**40 – 80**	4/6
8 – 12	5/8	**80 – 230**	3
über 12	4/6		

Take special care while choosing the right pitch of teeth.

Metal bandsaws

Technical Data	BSM 231/1 DG
Power / motor	Electric motor 0,85/1,2 kW P_2
Rated power	400 V 16 A EC plug
Cutting speed	28 / 56 m/min.
Saw band	2730 x 0,9 x 27 mm
Dimensions (W x L x H)	1555 x 1400 x 1250 mm
Weight	approx. 330 kg (727 lb)
Code No.	**90724**

Cutting range BSM 231 DG (mm)

∢	●	■	▮	▬
90°	225	225 x 225	•	300 x 200
45° R	210	200 x 200	•	200 x 200
45° L	170	150 x 150	•	200 x 80
60°	120	120 x 120	•	120 x 130

Accessories

Spare bands for BSM 231 all types

	Please mind for tooth pitch! Vario Matrix 2 2710 x 0,9 x 27 mm
	Tooth pitch 3 K
Code No.	**90704/1**
	Tooth pitch 4–6
Code No.	**90705/1**
	Tooth pitch 8–12
Code No.	**90706/1**

Spare bands for BSM 231 all types

	Please mind for tooth pitch! Vario Matrix 2 2730 x 0,9 x 27 mm
	Tooth pitch 3 K
Code No.	**90704**
	Tooth pitch 4–6
Code No.	**90705**
	Tooth pitch 8–12
Code No.	**90706**

SÜMA - BGU Maschinen - a German brand product

SÜMA BGU MASCHINEN

General Sales Conditions

General sale conditions (hereinafter AGB) of Südharzer Maschinenbau GmbH

1. Introduction

Our general sale conditions apply to all contracts, deliveries and miscellaneous agreements between us and any third parties, now and in the future. The contents of our order confirmations will be deemed as tacitly approved by the reference partner as well as these General Sale Conditions or any other statement of acceptance, unless a written claim is raised against all or parts of the order confirmation and served at our offices within one week from the confirmation date (date of the Post Office stamp). All contracts are meant as validly enforced from the date of sending of our written order confirmation.

Eventual purchase terms and conditions of our buyers and business partners will be deemed as binding on us, strictly if specifically accepted and attached in writing to the reference contract. Our general sale conditions are, therefore, binding and fully in place starting as of the shipment or order confirmation date.

In case of discrepancies between our general sale conditions and those of the reference partners, our AGB will prevail even in the absence of our previous and explicit rejection of said discrepant terms.

Moreover, we reserve ourselves the right of any technical innovation, change or improvement in the construction, size, weight, material and design of our products even without prior notice. The same applies also to the contents of our sale literature, including brochures and catalogues. The foregoing changes and modifications may eventually take place, if required, even after the sending of our order confirmation.

For materials, products, construction/engineering/design data, samples, capacities, pictures and any other product-related literature we reserve ourselves all industrial and intellectual property as well as copyright and ownership rights. The foregoing literature may not be reproduced or released to thirds without our express consent.

2. Our partners are to explicitly commit to treat as strictly confidential all information brought to their understanding during the regular business relationship with us and is beyond the scope of the normal commercial and technical information that is already of public domain.

3. Our order confirmation is the only document applicable for quantity and description of a shipment. Any shipment-related claim should be placed by the customer in writing latest within 8 working days after the date of the reference shipment document. Later claims will be disregarded in spite of any other written provisions of ours stating any eventually different arrangement.

Eventual other statements or allowances made by our sale representative are always subject to our written confirmation for validity. In the event of any infringement of a sale contract, we are entitled to claim for the damage/loss incurred to us by recovering the order value either in full or in part.

In the latter case, we shall recover 25% of the sale price, however without any obligation to submit evidence of the loss incurred and even if the defaulting party provided written evidence of any smaller loss.

4. Unless differently provided for in the contract, our prices are all meant ex-works excluded packing, freight and custom clearance. All prices are subject to additional application of the VAT at the applicable rate at the time of invoicing. Packaging is charged at cost price. No packaging returns are accepted.

5. Payments of our orders are to be executed within one month from the date of the invoice. Invoices are deemed as successfully sent against our internal evidence/receipt of a sent invoice plus two work days. Eventual term-based discounts must be shown on the invoice. Discounts for special payment terms are computed on the net order value, and can be strictly granted to customers having no outstanding credit with us.

All payments must be transferred to us as the only beneficiary allowed. Any amount paid to the sales representatives without our written collection mandate shall not release the payer from his payment obligations to us. Payments from our contract partners are deemed as fully executed strictly on the crediting of the entire invoice amount to our bank account.

Settlement of invoices by bank cheques and/or drafts shall only be accepted on account of payment. Bills of exchange will be strictly accepted for payment only and only if bankable and with the charging of all bank charges related to the discounting of the bills or protesting of a cheque dishonoured for a reason, which will always be paid in cash and immediately.

In the event of a late payment, we are entitled to the application of interest charges at the current bank rate and no less than 3% of the actual discount rate of the Deutsche Bank, and this without any need of a formal previous notice of late-payment default.

The purchase price becomes due forthwith irrespective of the term of any bills of exchange taken on deposit, in the following events:

a) The starting of a seizure proceeding against the reference customer, a major payment delay by the latter, or the receipt of a bad rating about him;

b) The customer transfers or pledges any asset or goods that are actually under a reserved-property arrangement with us.

To any of the foregoing events, all outstanding (even not yet due) amounts will become due at once whilst pending shipments will be strictly released against advanced payment in cash. Moreover, these occurrences, we will immediately trigger our right to request an efficient guarantee for our credits. This includes our right to terminate the contract after an adequate notice time and/or to claim for damages resulting from contract infringement. At the same time, we will be entitled to forbid the defaulting partner to stop transferring in whatsoever way the goods, we delivered with a retained-property clause and request the immediate recovery of any transferred property. In the event we accepted a return of the goods, our right of contract termination will be strictly and validly enforced by our written request to do so. All costs for the returning of the goods will be in charge of the defaulting contract party.

6. Delivery terms and conditions as well as lead times are always accounted ex-works. Delivery terms and time that was mentioned, but not confirmed in writing by us, will be binding on us in any case.

Delivery terms as well as any other delivery time granted, will be strictly accounted from the successful receipt of all export documents to be supplied by the customer.

A delivery term is considered as fully met as of the date of the collection notice sent, even if the goods could not be picked up on time and for any reason not directly related to us.

We are not liable for shipment delays due to late or deferred deliveries of our sub-suppliers.

Our delivery terms will automatically extend by an equal amount time as taken by the customer to fulfil his obligations in terms, for example, Of handing over to us the required delivery documents. A late-delivery fault of ours will only occur when the deadline is past and we failed to react within the new deadline stated in the written reminder of our customer and this without any good reason of ours. Should any loss or damage be incurred by our customer as a result of our failure to provide on-time delivery as mentioned before, our customer will be entitled to claim for a late-delivery penalty in the amount of the loss actually suffered by him and to be proven to us by means of written evidence and with the exclusion of all further claims.

7. If any unpredictable event occurs (i.e. Major force, strikes, production discontinuance, lack of raw materials, wars, embargoes, state bans and any other such condition impairing our delivery service) that is not resulting from a fault of ours, we will no longer be bound by our delivery obligations for the time of lasting of the event. Major force events include, for instance import/export bans, fire, shortage of fuels or energy supplies, barricades, riots and any other similar situations that are not controlled by or due to us.

Should the reference delivery and/or service be fully or partly made impossible, or unlikely to be executed, we will be released from all our shipment obligations.

8. Basically, we do not perform any assembly service of the goods delivered to any destination or place of use. However, we are available to do so and send our skilled installers against a formal written request of the customers,who will be charged for the cost of this extra service. Our staff, assigned to any installation service on customers' request, will be treated on site as own staff or helpers of the party having requested them. Our contract partners are not entitled to assign our assembly/installation personnel to other works that are beyond the scope of the original assembly request.

9.The type of shipment and transport vehicles are strictly selected by us, unless other special agreements are taken by the parties in writing. Goods that we notify as ready for collection, must be collected promptly and in no case later than 8 days after the date of notification. Alternatively, we may decide at our own discretion to ship the goods by any means as we may deem as most appropriate.

If the pick-up or collection of the goods is delayed for any reason beyond our control, we are entitled (but not obliged) to store or let someone for us store the reference goods and charge all costs and risks related to this operation to the defaulting contract partner.

In this case, we will decide at our own discretion on how to store the delayed goods and carry no liability for the latter during storage.

Moreover, we will be entitled to take all measures that we may deem as most appropriate to properly maintain them as if they had been shipped. This is also the case of partial shipments or deliveries of other services of ours as for instance, freight, carriage, and assembly/installation.

Although we always put our best endeavours for the complete shipment of each order in one lot, we are entitled to eventually arrange partial shipments if acceptable for the customer. In this case, each partial shipment will account as an independent case. Unloading of the goods at destination is entirely up to the customer who shall also bear all costs incurred.

10. Customers can rely on written representations concerning the quality of the goods, only if any such representations were officially made to them in writing and expressly handed over to them in their name.

Customers using our products for any special application of their own, are supposed and obliged to check on their own the suitability of the products for such applications. Customers are to inform us in writing and in advance about any special application requirement and eventually they are to notify us the outcome of their trials and tests carried out with our products.

Any assessment of the goods quality will be done on the status of the goods on the day of leaving our premises. Customers are to inspect the machines and products immediately as they are received and unloaded.

Claims must be notified to us in writing by and within 8 days from the day of handing-over at destination. This applies to any claim, including external flaws and defects detected during the first visual control of the complete lot delivered. Eventual transport damages must be notified to the driver in writing by adding a note of conditional acceptance on the delivery bill and taking care of giving a copy of this bill to the driver and sending another copy to us along with their claim. Failure of the customer to submit extensive evidence, we will not accept any claim for any damage or loss whatsoever.

Moreover, customers are to settle eventual transport damages directly with our insurance company to whom we will send due written report of the event occurred and for which a reimbursement was claimed.

Any other claim related to problems and defects that could not possibly be detected at first, even most accurate inspection, are to be reported in writing to us immediately on the date of the findings, making sure to fully describe the event, the consequent claim and the exact time of the occurrence.

11. Any such claim is subject to a limitation period of one month at the latest after the written refusal of the claim by us. Warranty claims of the customers are not valid for goods that have been mishandled, reprocessed or changed/reworked by other third without our prior permission.

The warranty validity period starts on the date of invoicing and no earlier of the date of the property risks transferred to the customer. Repairs and replacements will not reset the warranty period that will continue over the remaining original time.

Defective goods or the missing of any quality feature ensured by us will receive 6-month warranty. The warranty period for replacement goods and improvement works is also of 6 months, but at least until the elapsing of the original warranty for goods delivered.

For outsourced, third-party products, our liability shall be limited to the further assignment of liability claims to the supplier of the third-party product. We undertake to supply our customers all information needed for the follow-up of their claims and especially eventual documentary evidence, if available. Of course, this provision does not refer to cases in which the claim is due to a fault of ourselves.

Our warranty obligations are conditioned by the utmost compliance of the customer with our user's manuals, installation guides and other general specifications and recommendations concerning setup and use of our products. We will no longer be bound by our warranty commitments, if a written claim raised on us relates to a faulty or unauthorized change,

reworking or use of the products. We will accept no warranty claims and no liability for damages resulting from normal or use-related machine wear, excessive stress, improper maintenance, acts of vandalism, non-compliance with our user's manuals, misuse or faulty operation.

We will not accept any liability for faults and problems caused to our products by modifications or alterations of any person other than our authorized service dealers and staff. Our warranty strictly covers those products and parts thereof, that show a clearly evidenced material or production defect. The warranty service is moreover strictly limited to the free-of-charge replacement or repair of the defective item. Alternatively, we may decide to reimburse the value of the degraded price. We will accept no other obligation on us than the mere replacement or repair of the defective parts. Handling and freight costs will not be reimbursed.

Customers are to allow access to the site of defective goods, so that either the manufacturer or his representatives may inspect and survey the reference material claimed. In order for us to undertake the repairs or replacements which appear to be necessary at our sole discretion, customers are to allow in their claim a sufficient time and opportunity.

In order for us to undertake the repairs or replacements which appear to be necessary at our sole discretion, customers are to allow in their claim a sufficient time and opportunity. During our service interventions we are allowed to ask and customer are to provide adequate help as required. Customers may refuse to accept or decide to degrade the goods claimed and ask for compensation, if it was not possible to remove the problems claimed, or if the problems claimed remained even after our second intervention, or second parts supply, or any additional intervention of any other skilled labour appointed by any of the parties, providing that the term offered by the customer for successful remedy has been exceeded.

Customers are only entitled to receive a damage compensation in the case of premeditation or gross negligence of ours. We are not liable for any damage that is not strictly and directly related to goods shipped.

This is also true for eventual consequential damage of any kind and nature,as long as not due to premeditation or gross negligence of ours and providing that our quality warrant does not include a consequential-damages clause.

Unless different written provisions, the warranty does not cover customers' claims related to product defects that result from improper handling, infringement of our specifications and other contract conditions, providing that no premeditation and gross negligence is evidenced on our account. Similarly, we will not respond to claims placed by customers after the warranty validity period or for failure of compliance with the written form obligation. No further claims will be accepted for outsourced items, and especially claims due to production faults for which the original manufacturer is solely liable. However, we will transfer customers our rights against the reference manufacturer or sub-supplier providing that customers submit us a formal written request. Our effective disclaimer includes a waiver of liability on account of all our employees, service and installation staff.

12. All goods delivered will remain our sole property up to successful settlement of the complete payment. Our retained property right will remain validly in force until complete settlement of payment as well as eventual other receivables of ours from the customer. Customers are not allowed to integrate the goods with/on other items or transform them into other products subject to any right whatsoever of other thirds (i.e. collateral assignment, liens etc...). Should our goods be integrated/transformed with/into a different item, we will automatically gain co-property right of the new item obtained from our product.

The extent of this right will be based on the ratio between the purchase price of our product and the value of the new item. Customers are to keep and maintain the new item on our behalf without any remuneration. Customers may transfer the goods delivered with a retained property clause in the course of their normal business, providing that they have not previously assigned their rights to other thirds, or that these rights are not encumbered in any other way. In this case, customers assign us all claims arising from the sale of retained items in order to secure our credits. If our claims arising from the sale of retained items collide with similar rights of other suppliers, we will acquire a co-title thereto in the same proportion as aforesaid co-property right. Customers shall be obliged to keep the proceeds from sales subject to retention of title in a separate deposit and strictly use these proceeds for the settlement of our outstanding credits. Should the value of securities exceed our credits by more than 20%, we will release the balance of the secured amounts against a written request of the customer to do so.

In case of a payment delay by the customer, all other outstanding payments will become due at once. We are entitled to forbid the customers any further reworking of the products in combination with other items and especially the sale of retained-property goods. Moreover, we are entitled to retrieve eventual retained-property goods. Customers have insofar no right of possession in the retained property goods. On our request, customers are to promptly inform us the date when retained-property goods were sold and the name/details of the buyer.

13. Basically, we will not accept the return of any goods that were regularly ordered and supplied by us without defects. Should any extraordinary situation lead us to decide to accept a return from a customer, we will only pay 90% back of the net invoice amount less any outlay or expenditure for freight, transport damages etc...

14. Should any contract clause become partly or fully invalid or no longer applicable, this will not affect the validity of the remaining parts of the contract between us and the customer that will remain fully in place. The parties agree to replace any such invalid or not enforceable clauses by other provisions that may better match their requirements and the purpose of the contract.

15. All contract relationships between us and our customers are strictly subject to the German Law, with express waiver of the United Nations Convention on Contracts for the International Sale of Goods.

16. The parties agree that all rights and obligations (payment and delivery) under this contract shall be deemed as executed at the place of our premises in 99734 Nordhausen, unless other written provisions apply. The exclusive local place of jurisdiction for any disputes under this Contract shall be the Court of the Nordhausen, Germany. However, we reserve ourselves the right to conduct legal proceeding against our partners at their jurisdictions.

17. In the framework of, or in connection with our business operations, we will collect data on our partners and process them in accordance with the German privacy rules, regardless of whether the data were supplied by our partners or other thirds.

Südharzer Maschinenbau GmbH

Helmestraße 94 · 99734 Nordhausen/Harz • Germany
info@bgu-maschinen.de

Our offices are opened:

Mondays through Thursdays	from 8 am to 5:30 pm
Fridays	from 8 am to 4 pm

Contact:

Receptionist	Phone: +49 3631 6297-0
	Fax: +49 3631 6297-111

NEW FORESTRY WINCH PROGRAM FROM AUTUMN 2018!

Your BGU Maschinen merchant

All technical data, measurements, sizes, and pictures are subject to changes without further notice based on eventual technical improvements, and should be considered as strictly indicative. The products may be shipped to customers in other colour hues than pictured herein. All prices are indicative and the manufacturer may change them as needed. With reserve of printing errors and typos. Validity: from 01 03 2018

SÜMA
BGU MASCHINEN